Graupner / heim

Starlet 50
Elektro

Model helicopter

Order No. 4444 Kit

Warning!

The contents of this kit can be assembled to produce a working RC helicopter, but the model is by no means a harmless plaything. It is a complex flying machine, and if assembled incorrectly or handled incompetently or carelessly it can cause serious injury to persons and damage to property.
You alone are responsible for completing the model correctly and operating it safely. The kit also includes two further information sheets - SHW 3 and SHW 7 - which include safety notes. They are an essential part of these instructions.

GRAUPNER GmbH & Co. KG D-73230 KIRCHHEIM/TECK GERMANY
No liability for modifications, errors and printing errors. ID# 52072 5/04

Foreword

The STARLET 50 ELEKTRO is a variant of the standard STARLET 50, powered by an electric motor and 20 ... 24 cells, and represents a highly capable medium-sized electric helicopter. The flight batteries are arranged inside the bottom of the chassis, where they can easily be changed. Possible flight times depend primarily on the motor, the flight batteries, the rotor blades and the mechanical set-up; a reasonable expectation is around 8 - 10 minutes.

The STARLET 50 ELEKTRO is a great choice for the beginner, as it is a reasonably priced trainer helicopter offering exceptional upgrade potential. It can easily be converted into UNI-Expert ELEKTRO mechanics, and can even be converted into the glow-powered version if you wish; it is therefore a future-proof investment.

However, the model is not just for beginners; it is also of interest to the advanced helicopter pilot with aerobatic ambitions who is looking for a compact electric model with an adequate excess of power.

The extensive upgrade potential makes the STARLET 50 ELEKTRO a fine starting point for a helicopter system, extending from a compact beginner's helicopter to an expert's machine or scale model. In this respect it emulates the successful glow-powered STARLET 50.

The model's large-diameter tail rotor provides very good control response around the vertical axis, and the tail rotor is driven in auto-rotation mode. The tall chassis and curved tail boom provide ample ground clearance for the tail rotor; the tail rotor shaft runs in a curve through the tail boom, and thus cannot run out of true.

The lightweight, vacuum-moulded cabin fairing is mounted on rubber grommets for vibration resistance. It is very easy to install and remove, providing excellent access to the radio control system and mechanics. The long, black eloxided tail boom is effectively braced by two struts, and can be replaced very easily and quickly if it should be damaged. The tail boom length is designed to enable the beginner to learn to fly using low-cost short reflex-section wooden rotor blades, but still allow the expert to fly „3-D" aerobatics with longer, symmetrical-section GRP rotor blades.

Specification

Length excl. rotor approx.	1310 mm
Width excl. rotor approx.	240 mm
Height approx.	430 mm
Rotor Ø range	1160 .. 1365 mm
All-up weight min. approx.	4000 g

Warning notes

- **The contents of this kit can be assembled to produce a working helicopter, but the model is by no means a harmless plaything. If assembled incorrectly or handled incompetently or carelessly it can cause serious injury to persons and damage to property.**
- **When the model helicopter's motor is running, the two rotors are spinning at high speed and contain an enormous quantity of rotational energy. Anything and everything that gets into the rotational plane of the rotors is either damaged or destroyed - and that includes parts of your body. Please take extreme care at all times with this machine.**
- **If any object obstructs the rotational plane of the revolving rotors the rotor blades will probably be severely damaged as well as the object. Broken parts may fly off and result in enormous imbalance; the whole helicopter then falls into sympathetic vibration, you lose control and have no way of predicting what the model will do next.**
- **You may also lose control if a problem arises in the radio control system, perhaps as a result of outside interference, component failure or flat or faulty batteries, but in any case the result is the same: the model helicopter's response is entirely unpredictable. Without prior warning it may move off in any direction.**
- **Helicopters have many parts which are naturally subject to wear, including gearbox components, motor, ball-links etc., and this means that it is absolutely essential to check and maintain the model regularly. It is standard practice with full-size aircraft to give the machine a thorough „pre-flight check" before every flight, and this is equally important with your model helicopter. Constant checking gives you the opportunity to detect and correct any faults which may develop before they are serious enough to cause a crash.**
- **The kit also includes two further information sheets - SHW 3 and SHW 7 - which include safety notes and warnings. Please be sure to read them and keep to our recommendations. They are an essential part of these instructions.**
- **This helicopter is designed to be constructed and operated by adults, although young people of 16 years or older may do so under the instruction and supervision of competent adults.**
- **The model features sharp points and edges which may cause injury.**
- **Flying model aircraft is subject to certain legal restrictions, and these must be observed at all times. For example, you must take out third party insurance, you must obtain permission to use the flying site, and you may have to obtain a licence to use your radio control system (varies from country to country).**
- **It is important to transport your model helicopter (e.g. to the flying site) in such a way that there is no danger of damaging the machine. Particularly vulnerable areas are the rotor head linkages and the tail rotor generally.**

- **Controlling a model helicopter successfully is not easy; you will need persistence and determination to learn the skills, and good hand-eye co-ordination is a pre-condition.**
- **Before you attempt to fly the model it is absolutely essential that you should study the subject of helicopters in depth, so that you have a basic understanding of how the machines work. Read everything you can on the theory of helicopters, and spend as much time as you can watching other model helicopter pilots flying. Talk to chopper pilots, ask their advice, and enrol at a specialist model flying school if you need to. Many model shops will also be prepared to help you.**
- **Please be sure to read right through these instructions before you start work on the model. It is important that you clearly understand each individual stage of assembly and the correct sequence of operations before you begin construction.**
- **Don't make modifications to the model's construction by using parts other than those specifically recommended, unless you are certain of the quality and suitability of the substitute parts for the task.**
- **We have made every effort to point out to you the dangers inherent in operating this model helicopter. Since neither we, the manufacturer, nor the model shop that sold you the kit have any influence on the way you build and operate your model, we are obliged to disclaim any liability in connection with it.**

Liability exclusion / Compensation

As manufacturers, we at GRAUPNER are not in a position to influence the way you build and set up the model, nor install, operate and maintain the radio control system components. For this reason we are obliged to deny all liability for loss, damage or costs which are incurred due to the incompetent or incorrect use and operation of our products, or which are connected with such operation in any way.
Unless otherwise prescribed by binding law, the obligation of the GRAUPNER company to pay compensation, regardless of the legal argument employed, is limited to the invoice value of that quantity of GRAUPNER products which was immediately and directly involved in the event which caused the damage. This does not apply if GRAUPNER is found to be subject to unlimited liability according to binding legal regulation on account of deliberate or gross negligence.

Contents

- Foreword P.2
- Warning notes P.3
- Accessories, additional items required P.6
- 1. Assembling the main mechanics P.7
- 2. Installing the radio control system P.19
- 3. Assembling the main rotor head P.21
- 4. Assembling the tail rotor gearbox P.26
- 5. Installing the control bridge P.28
- 6. Assembling the tail rotor head P.29
- 7. Tail boom P.30
- 8. Installing the skid landing gear P.33
- 9. Tail rotor control system P.33
- 10. Cabin P.34
- 11. Main rotor blades P.36
- 12. Setting up P.37
- 13. Final checks before the first flight P.39
- 14. Maintenance P.39
- 15. Adjustments during the first flight, blade tracking P.40
- 16. General safety measures P.41
- 17. Basic helicopter terminology P.42

The instructions

We have invested considerable effort in producing these instructions, with the aim of ensuring that your model helicopter will fly reliably and safely. Please take the trouble to follow the instructions step by step, exactly as described, as this guarantees a successful outcome. This applies to you whether you are a relative beginner or an experienced expert.

- The illustrations show how the model is constructed; be sure to read the instructions which accompany the drawings.

- All the joints marked with this symbol need to be secured with thread-lock fluid, e.g. Order No. 952, or bearing retainer fluid, Order No. 951. Remove all traces of grease from the joint surfaces before applying the fluid.

- All bearings, whether plain, ballrace or needle roller, must be lubricated thoroughly. The same applies to all ball-links and gears, even if the instructions do not state this specifically.

- You will find the parts list, replacement parts list and the associated exploded drawings at the end of these instructions.

Accessories

Recommended motors and accessories for the Starlet 50 *Elektro*

Motor	Speed controller	Batteries
ULTRA 1300-12H Order No. 6363	**POWER MOS 60** Order No. 7176	**SANYO 12N-3600 NiMH** Order No. 2489.12 (2 Stck.)
ULTRA SENSORLESS 300-06 Order No. 6390	**BRUSHLESS CONTROL 30SL** Order No. 2879	**SANYO 12N-3600 NiMH** Order No. 2489.12 (2 Stck.) or **SANYO 10N-3600 NiMH** Order No. 2489.10 (2 Stck.)

Suitable main rotor blades

Order No. 1291.1	Wood, reflex-section, 500 mm long	Rotor Ø 1157 mm (supplied)
Order No. 1296	GRP, reflex-section, 552 mm long	Rotor Ø 1261 mm
Order No. 1269	GRP, symmetrical, 552 mm long	Rotor Ø 1261 mm
Order No. 1271	GRP, symmetrical, 602 mm long	Rotor Ø 1361 mm

Radio control equipment: see main Graupner catalogue
We recommend using a radio control system equipped with special helicopter options, or a micro-computer radio control system such as the mc-12, mc-14, mc-15, mc-19, mc-22 or mc-24.

As a minimum the radio control system must feature a 3-point swashplate mixer and five directly connected servos for the functions pitch-axis, roll, collective pitch, tail rotor and motor.

Servos: the model should only be flown with high-performance servos, e.g. C 4041, Order No. 3916, or servos of at least comparable performance.

Gyro system:
PIEZO 5000 gyro system, Order No. 5146, with NES-8700G super-servo, Order No. 5156, or PIEZO 550 gyro system, Order No. 5147, or G490T gyro system, Order No. 5137

Electronic speed governor:
mc-HELI-CONTROL, Order No. 3286

Receiver power supply:
For safety reasons it is essential to use a pack of at least 800 mAh capacity, together with a switch harness with adequate cable cross-section for the high currents which will flow.

Do not use a receiver battery with more than 4 cells under any circumstances.

We also recommend a voltage monitor module, Order No. 3138, which allows you to monitor the voltage of the receiver battery constantly.

1. Assembling the main mechanics

The STARLET 50 mechanics consist largely of glass fibre reinforced nylon, a material which offers considerable advantages for model helicopter construction compared with, say, aluminium. These advantages include high mass constancy combined with low weight, freedom from fatigue effects, low noise when operating, and the ability to absorb motor vibration. The design of this type of mechanical system endows it with great robustness and rigidity; in a hard landing it is preferable that the parts should either survive undamaged (and therefore be unconditionally re-usable) or simply break, in which case they have to be replaced. In contrast, if the chassis should bend or warp, such damage might not even be noticed, but it would certainly have a serious adverse effect on the other components, which might not work at all, might fail prematurely, or could even jeopardise the safety of the whole system. These are problems inherent to metal mechanical systems, but they do not occur with our type of construction.
The many advantages of reinforced nylon construction are balanced by just a few drawbacks: the parts are more complex (and therefore more expensive) to manufacture, and the builder is required to be more careful and conscientious when assembling and setting up the components; slight trimming of the parts themselves may also be necessary occasionally. The reward for a considered, patient approach is a model which is very durable, wears very slowly, and therefore has an extended useful life.

Shafts, bearings and fits

Virtually all the rotating parts of the mechanics are ballraced. When ballraces are used it is very important that the shaft is a tight fit in the inner ring of the race, so that it cannot revolve within the ring. Otherwise the inner ring heats up (discolouring it blue or yellow), damaging the bearing and rendering it unusable. In the worst case the bearing may become so hot that it melts the nylon seating, and the shaft then loses its position relative to other components. Please note that this is not a fault in the bearing seat material; it is simply a result of incorrect bearing fits.
A further possible result of a loose bearing fit is that the shaft slips within the inner ring, and its diameter is worn down in the bearing area. In this case the carefully set meshing clearance of any gears mounted on the shaft is lost, i.e. the gears no longer mesh correctly, leading to increased rates of wear and eventual failure.
In the Graupner/Heim system the fits between shafts and ballraces are maintained on the tight side, in order to avoid the problems described above. However, manufacturing tolerances are inevitable, and occasionally the result is too tight a fit, i.e. the bearing cannot be pushed onto the shaft. In this case the shaft must be rubbed down using fine abrasive paper (600 - 1200 grit) until the bearing can be pushed onto it using no more than moderate force.
If the fit should be loose - which can also arise with the accumulation of manufacturing tolerances in both parts - the bearing can simply be glued to the shaft using LOCTITE bearing retainer fluid 603, which guarantees a firm seating. Please note that the cure time for bearing retainer fluid varies with the fit: the tighter the joint, the quicker it cures. Under certain circumstances you may only have a few seconds to locate the bearing correctly on the shaft before it is permanently and immovably fixed.
If a shaft is supported in multiple ballraces, it is important to prevent the bearings being under tension in the axial direction. This can be achieved in either of two ways: either by locating both bearings on the shaft very accurately, or by using a combination of fixed and sliding fits: one ballrace is a press-fit on the shaft, or glued in place, making it immovable, whereas the other bearing is a sliding fit, i.e. it can be moved along the shaft axially using moderate force. It will then take up its optimum position automatically when installed.
In general terms you can assume that the smaller the shaft diameter and the higher the rotational speed, the higher the danger of wear in bearings.
The smaller the difference between inside diameter and outside diameter of the ballraces, the higher the danger of tension in the bearings against each other.
If your model is to be as safe and reliable as it possibly can be, then all this needs to be taken into account whenever you are fitting a ballrace to the model. For this reason the building instructions always state when thread-lock fluid or bearing retainer fluid must be used for the various joints and connections.

1.1 Assembling the tail rotor drive unit *(bag UM-1A)*

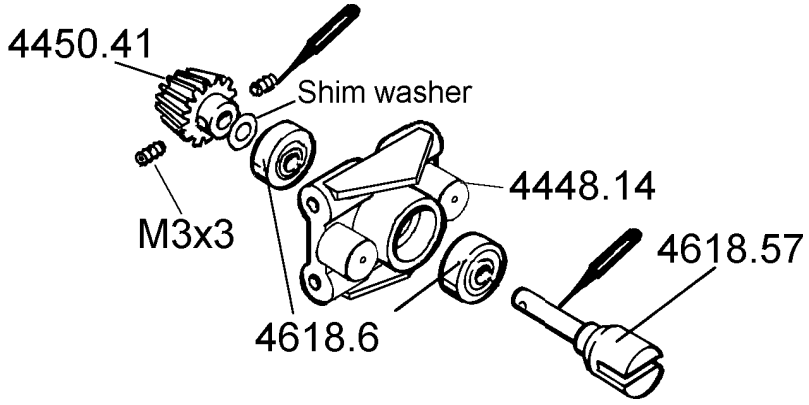

The shaft of the quick-release coupling 4618.57 must not exhibit any axial play in the bearings 4618.6. If the shaft is not a tight enough fit in the bearings, glue it in the ballraces using bearing retainer fluid 603, Order No. 951. This is the procedure: start by applying bearing retainer fluid 603 to the rear ballrace and slide it along the shaft until it rests against the coupling yoke. Wait until the adhesive has cured, which may take anything between 20 seconds and 30 minutes depending on the fit. Press this assembly fully (as far as it will go) into the bearing holder 4448.14, then apply bearing retainer fluid 603 to the front ballrace and push it straight onto the shaft and into the bearing holder as far as it will go. Now - before the adhesive cures - immediately check that the shaft still rotates freely, as it is possible that axial tension will make the bearings stiff to move. If this happens, tap lightly on the end of the shaft with a screwdriver handle or similar, or tap harder on the bearing holder until the races rotate freely. When you are satisfied, leave the bearing retainer fluid to cure fully.
Now fit a shim washer and the pinion 4450.41 on the front end of the shaft, press them against the front bearing and tighten the two grubscrews in this position. This is the procedure: first apply a drop of thread-lock fluid (Order No. 952) to the threaded holes, and fit the first grubscrew so that it engages fully on the flat ground into the shaft; rotate the pinion to and fro until the grubscrew engages fully, then tighten it moderately. Now fit the opposite grubscrew and tighten it very firmly, before finally tightening the first grubscrew permanently. This procedure ensures that the pinion rotates absolutely true.

1.2 Assembling the layshaft *(bag UME-1B)*

Fix the bottom bearing 4450.31 to the layshaft 4450.7 using bearing retainer fluid 603, Order No. 951; the ballrace should rest against the pinion. Allow the adhesive to cure fully, then press the shaft and bearing into the bottom bearing support 4448.11. Apply plenty of bearing retainer fluid 603 to the two M3 x 20 cheesehead screws, fit them through the top bearing support 4448.11A and secure them using two M3 nuts as shown in the drawing. Tighten the nuts well so that the screws cannot turn when the motor mount is installed and the self-locking nuts are tightened.

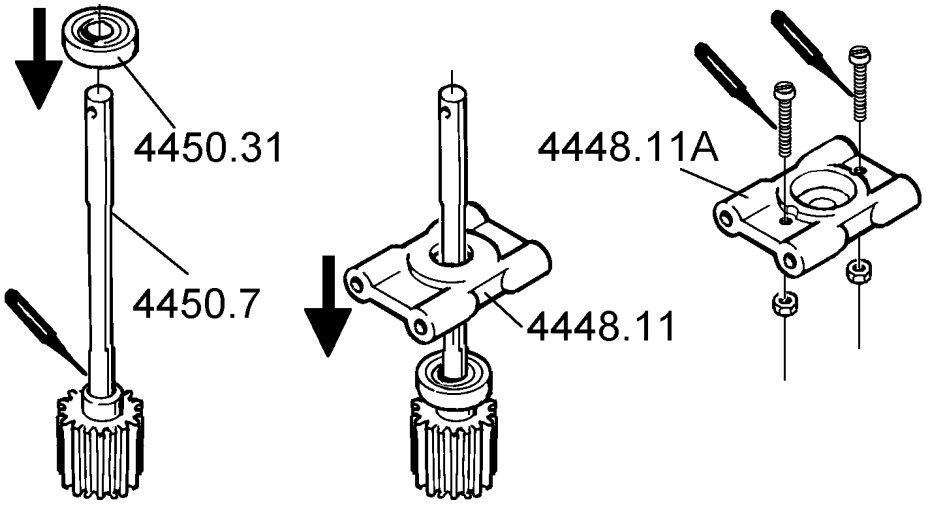

Slip the top bearing support 4448.11A on the shaft, leaving it loose initially (note correct orientation; the opening in this bearing support must face *up*), then fit the top bearing 4450.31 followed by a shim washer and the gear 4618.105, with the freewheel sleeve 4618.107 inserted. Line up the cross-holes in the shaft and freewheel sleeve, and carefully press the roll-pin 4618.65 through the parts, but only to the point where it engages in the shaft; this enables you to withdraw it again if necessary.

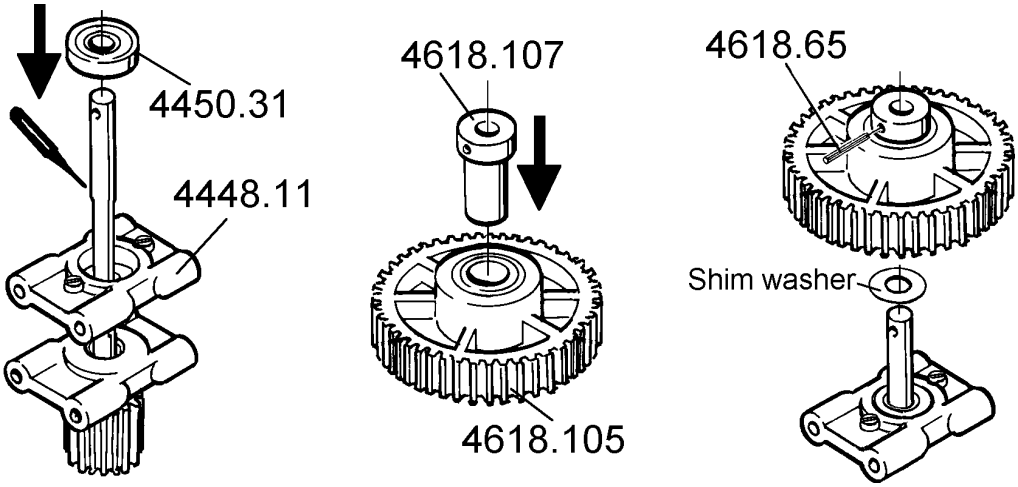

Now press the top ballrace 4450.31 into the bearing support 4448.11 and slide this assembly up against the shim washer under the freewheel sleeve. Temporarily fit the layshaft assembly between the mechanics side frames 4450.9 and 4450.10, and check that the top bearing rests against the shim washer and the freewheel sleeve when installed; if there is a gap, this must be corrected by fitting additional shim washers. Don't fit too many shim washers, as this would place the bearings under excessive strain.

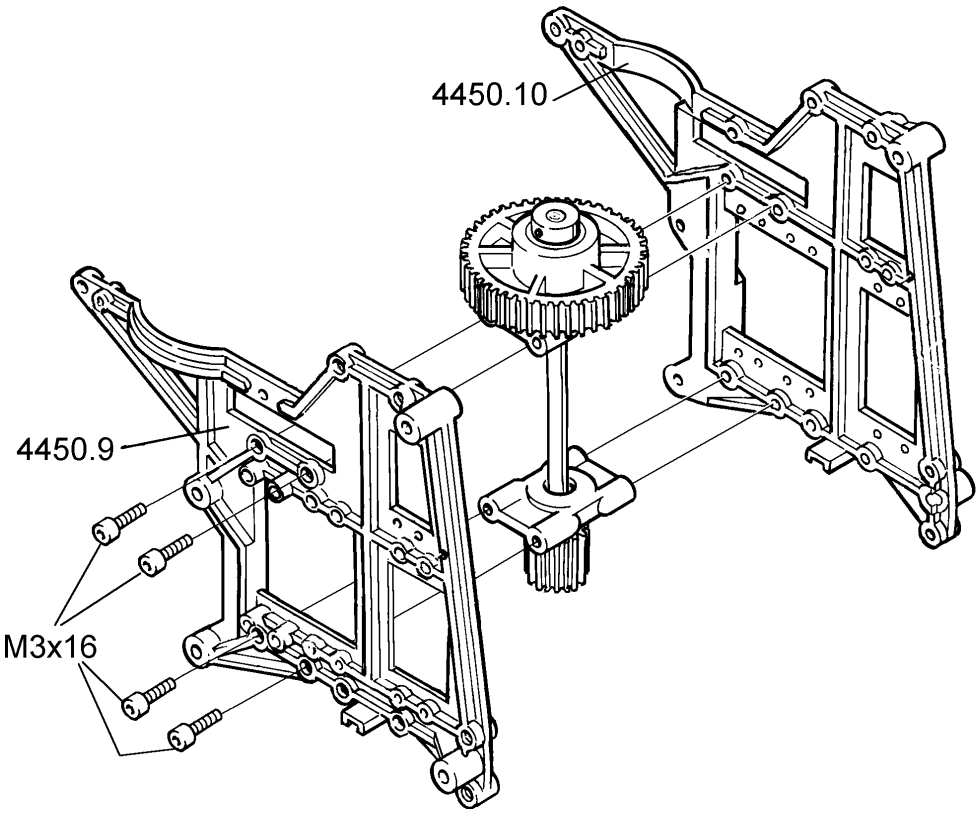

Once the clearance is correct, the shaft can be glued in the ballrace using bearing retainer fluid 603, Order No. 951; but before you do this carefully press the roll-pin completely into the freewheel sleeve. This assembly must now be screwed securely between the mechanics side frames and left there, so that you can check that the bearings are free-moving; if not, tap lightly on the ends of the shaft, as already described.

1.3 Preparing the main rotor shaft and bearings *(bag UM-1C)*

Fix the swashplate guide 4618.113 to the dome bearing holder 4448.8 using two M2 x 12 cheesehead screws. Press a ballrace 4450.24 into the dome bearing holder and another into the main rotor shaft bearing holder 4448.12 (grease the bearings).

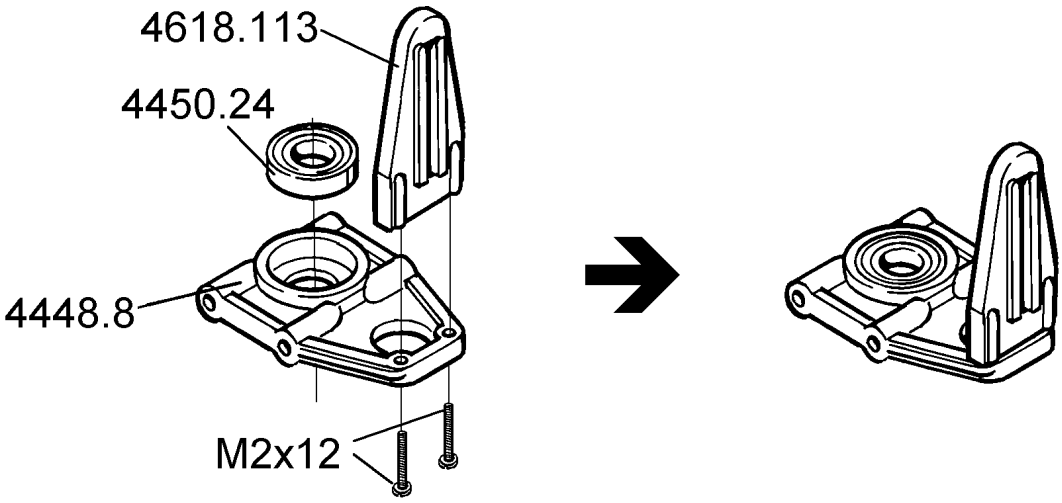

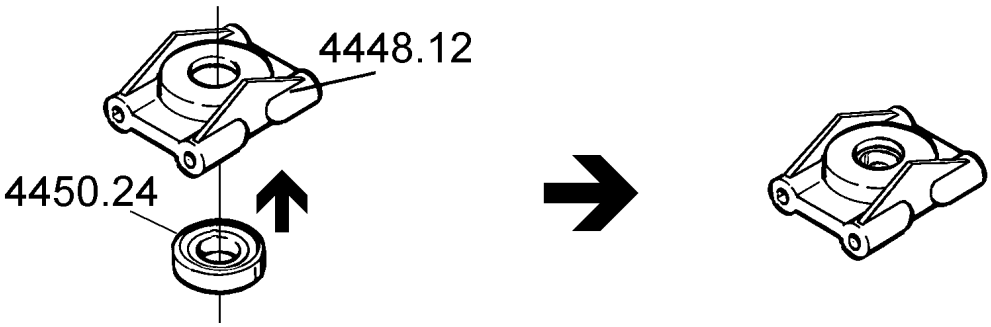

Slide the circlip 4607.156 onto the main rotor shaft 4450.43 from the top end, and allow it to snap into the channel; please note the following:

- The circlip must not be over-stretched, i.e. don't open it further than is absolutely necessary to fit it on the main rotor shaft; use special circlip pliers if possible.
- The inner face of the circlip features one rounded and one sharp edge; the sharp edge must face up.
- The circlip must be a firm fit on the shaft; it should not be possible to rotate it by hand.

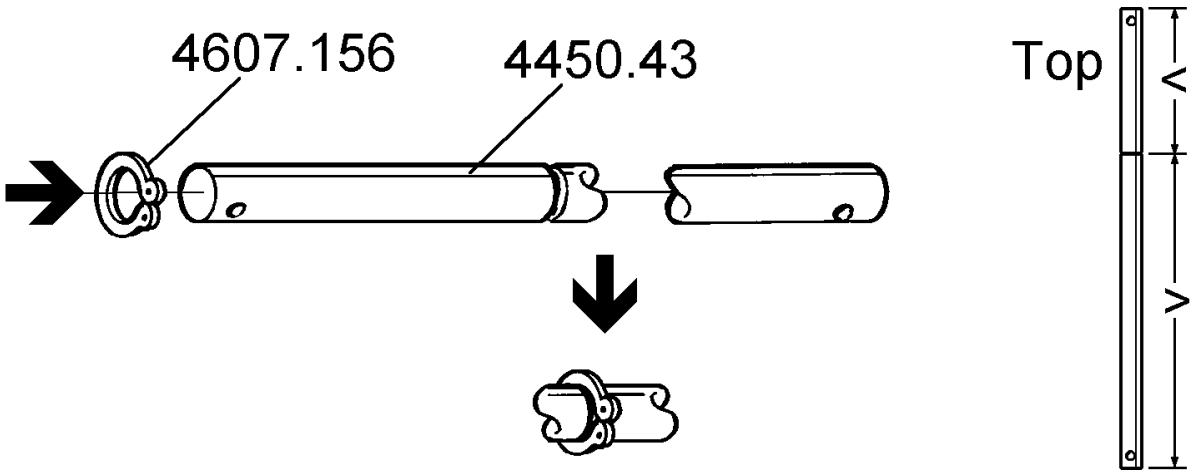

1.4 Assembling the main gearbox *(bag UME-1)*

Fix the tail rotor drive unit, the layshaft and the main rotor shaft bearing holders between the mechanics side frames 4450.9 and 4450.10 using M3 x 16 socket-head cap screws, but don't tighten the screws fully at this stage. Fit a shim washer 4450.40 and the dome bearing holder onto the main rotor shaft from the underside. Working from above, pass the main rotor shaft through the bottom rotor shaft bearing and the ring gear 4450.20A to the point where the dowel pin 4450.37 can be fitted through the cross-hole at the bottom end of the main rotor shaft. Now pull the main rotor shaft up fully, so that the dowel pin engages in the recess in the ring gear. Fix the dome bearing holder between the mechanics side frames using M3 x 16 socket-head cap screws, and check for axial play between the main rotor shaft and the bearings; there should be none at all. If necessary fit additional shim washers **under the circlip** to remove any lost motion. However, take care not to place the ballraces under strain by fitting too many and/or too thick washers.

To add or remove the shim washers always undo the dome bearing and remove the main rotor shaft in the opposite sequence to that described for installation. On no account remove the circlip from the main rotor shaft!

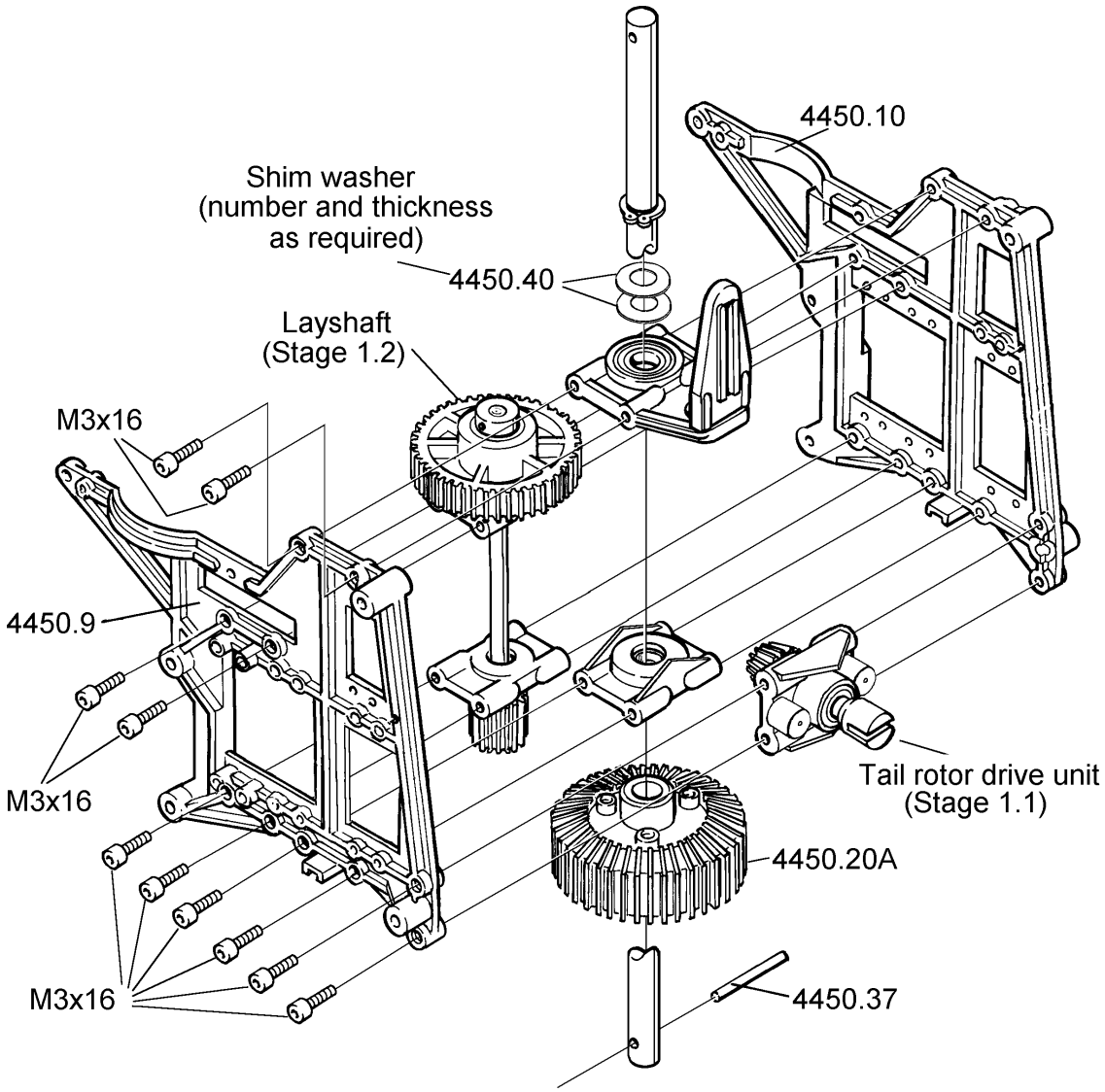

The next step is to set the correct meshing clearance in the gearbox. Initially the meshing clearance of this gearbox stage should be set too tight, so that the gears roll „hard" against each other. If this is not possible, i.e. if there is already detectable gear clearance at the tightest setting when the mechanics are screwed together, the bottom main rotor shaft bearing 4448.12 must be removed, turned through 180°, and re-installed. If this is still not sufficient, turn the

bottom layshaft bearing bracket through 180° horizontally and re-install it. This procedure compensates for any slight offset of the brass inserts in the bearing supports; these manufacturing tolerances can never be completely avoided. The meshing clearance between the spur gear and the layshaft pinion can now be adjusted by loosening the M3 x 16 socket-head cap screws slightly in the bearing brackets, drawing a strip of thick writing paper between the gears, pressing the gears together, and re-tightening the screws. Wind the paper out, and the gears should now rotate smoothly without any tendency to bind at any point; if you are not sure, repeat the adjustment process.

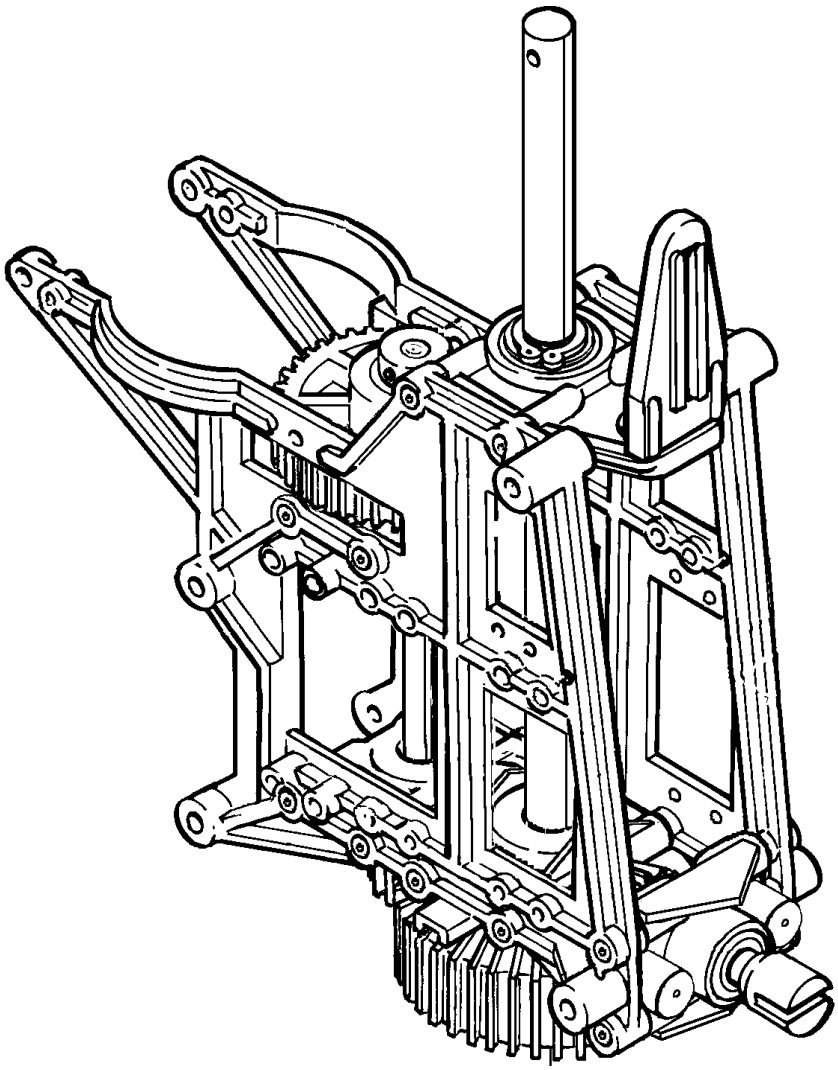

1.5 Installing the motor *(bag UME-2)*

The mechanical system is designed for the ULTRA 1300-12H, and the motor should now be screwed to the motor mount 4444.3. Place this assembly in the mechanics, fitting the rear end of the motor mount over the screw ends projecting from the upper layshaft bearing holder. Fit the M3 self-locking nuts to secure it. At the front fit the motor mount on the screw projecting from the spacer, and secure it with a further self-locking nut. The motor mount is slotted to permit adjustment of the meshing clearance of the first gearbox stage: wind a strip of thick cartridge paper between the gears, press the gears hard against each other and tighten the motor mount retaining screws. It is important to check that the gears really are exactly parallel to each other, i.e. that the motor is not installed at an angle. Wind the paper strip out, and check that there is just detectable play in the gears.

Note: if you find that you cannot install your selected motor correctly, i.e. it strikes the inside of the mechanics side frames at the front, material must be removed from the side frames using a fretsaw or file to provide clearance.

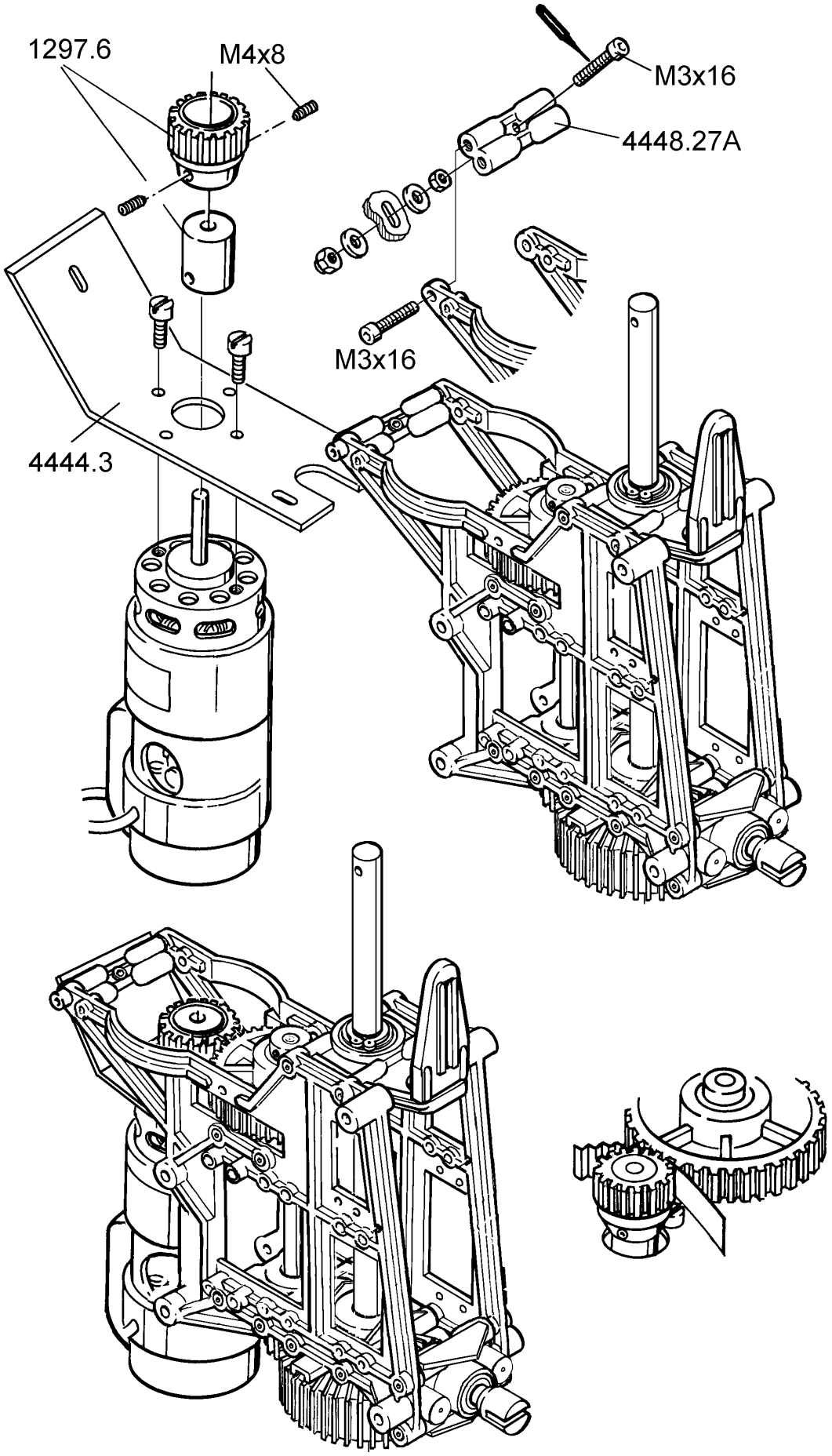
1297.6
M4x8
M3x16
4448.27A
M3x16
4444.3

1.6 Assembling the sub-structure *(bag UME-4)*

Assemble the sub-structure from the following components as shown in the drawings: side frames 4448.34, bulkhead 4450.18, spacers 4450.17, RC box 4448.101 and skid brackets 1291.21A, using the sizes of self-tapping screw stated in the drawings.

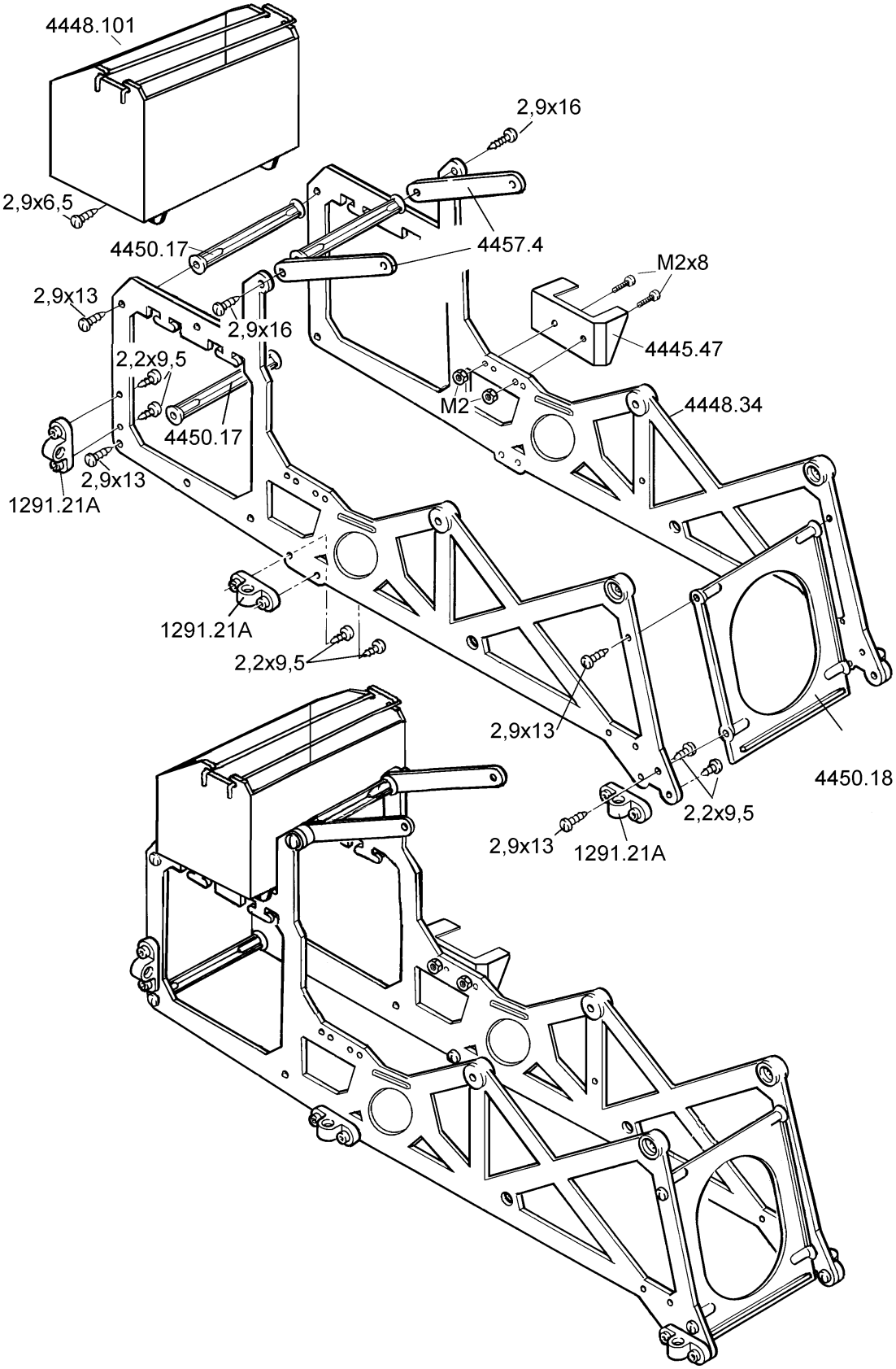

1.7 Attaching the mechanics to the sub-structure *(bag UME-5)*

Offer up the circular spigots on the main gearbox (from Stage 1.5) to the sub-structure side frames at the rear, and allow them to snap into place. Fix the parts together using M3 x 16 socket-head cap screws and washers.

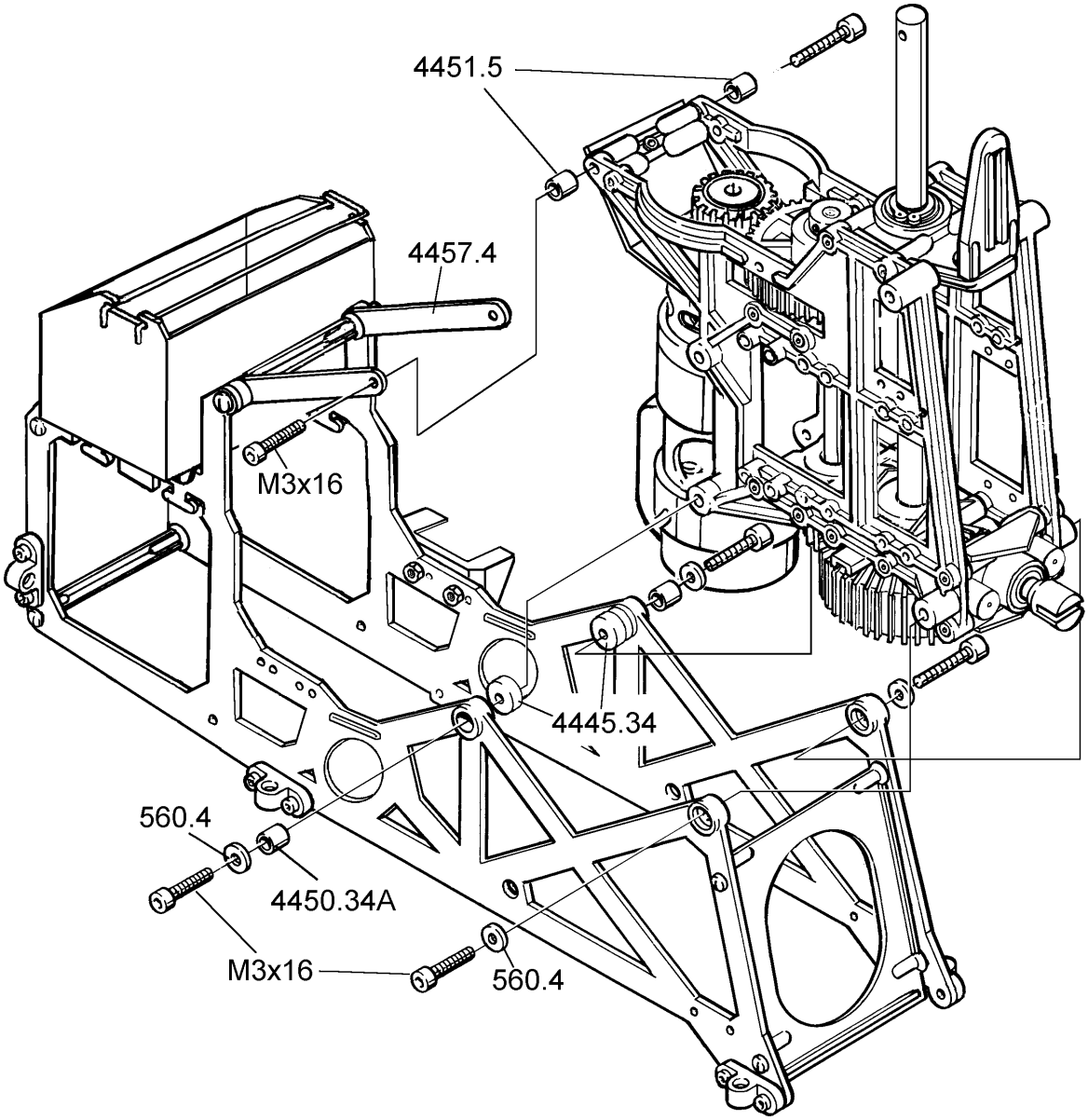

Two further M3 x 16 socket-head cap screws are used in the centre; fit a washer on each one first. Fit the brass sleeves 4450.34A in the sub-structure side frames, and fit the screws through them and the two spacer washers 4445.34 and into the mechanics side frames. Tighten the screws in this position.
Undo the two M3 x 16 socket-head cap screws at top front which were fitted into the spacer 4448.27A when the motor was installed, then fit the aluminium braces 4457.4 and the spacer sleeves 4451.5 and tighten the screws fully again.

1.8 Power supply to the drive motor

The two flight batteries are wired in series using the link lead 3031 to produce a nominal voltage of 28.8 V. The diagram shows the basic wiring of the batteries, speed controller and drive motor; the exact procedure is described in the instructions supplied with the speed controller and drive motor.

Wiring diagram

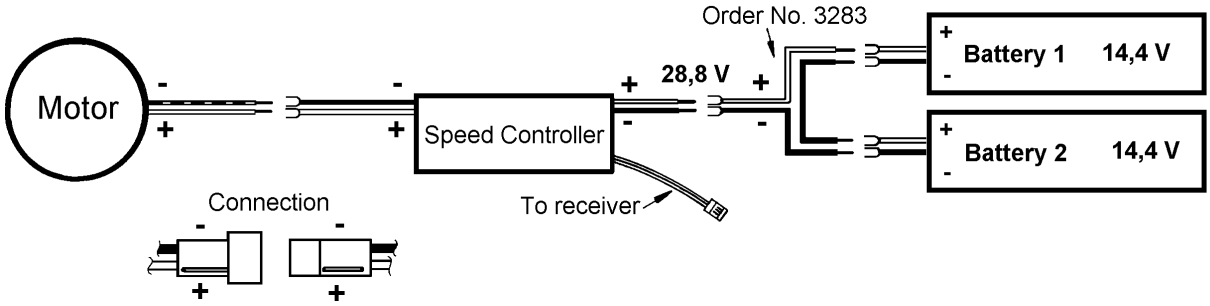

1.9 Installing the flight batteries

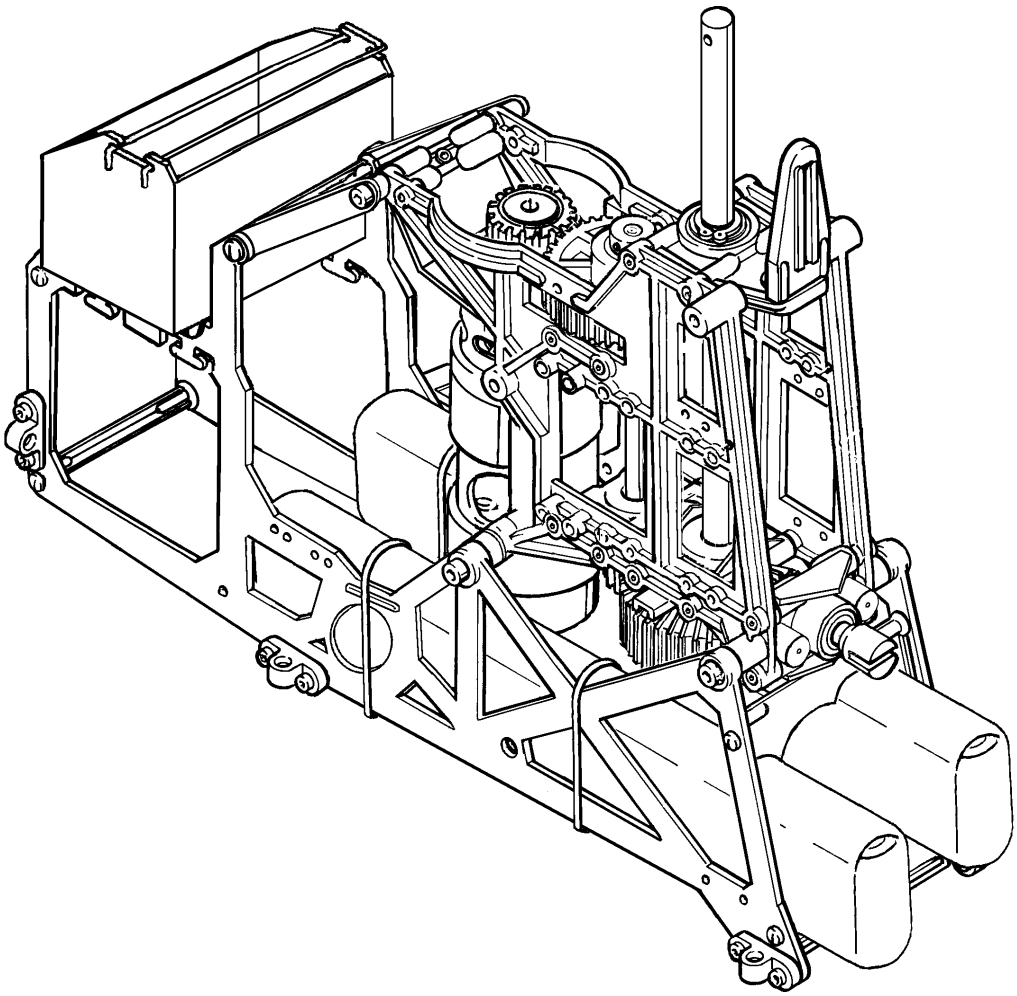

The flight packs are accommodated inside the mechanics sub-structure, and fixed directly to the chassis using cable ties. Later the Centre of Gravity position can be corrected if necessary by moving the packs forward or aft; if you intend to use 12-cell packs you will need to cut away the rear bulkhead 4450.18, as shown in the drawing.

1.10 Installing the gyro platform *(bag UM-7)*

Fix the gyro platform brackets 4450.16 to the side frames using 2.2 x 9.5 mm self-tapping screws. At a later stage the gyro platform 1291.12 is fitted on the brackets and held in place with four 2.2 x 6.5 mm self-tapping screws; this should not be done until the servos have been installed.

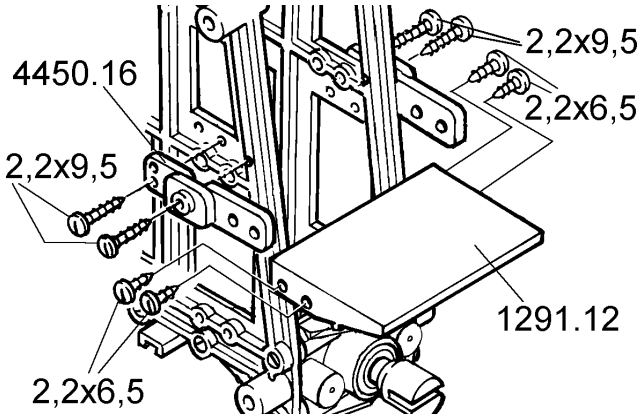

1.11 Collective pitch compensator and swashplate *(bag UM-8)*

The collective pitch compensator 4618.47A is assembled as shown in the drawing.

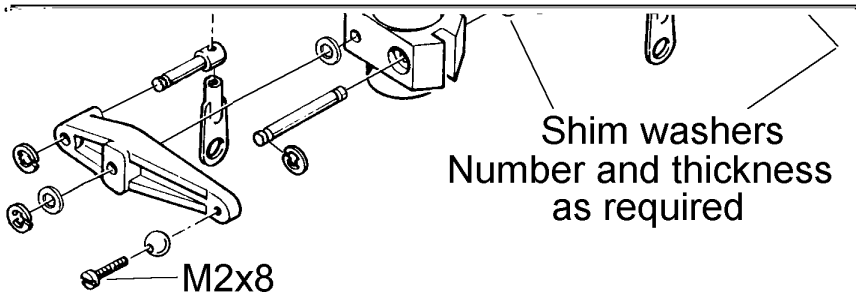

The first step is to fit a circlip on each of the brass pins and glue them in the holes in the collective pitch compensator hub 4618.46 using bearing retainer fluid, with the circlips resting in the recesses. Remove any rough edges from the collective pitch compensator arms and fit them on the projecting end of the pins, fitting at least one shim washer between hub and arm; the arms must rotate freely on the pins; if not, de-burr the holes. When you fit the outer circlips there should be no axial play in the arms on the pivot pins; if there is, fit additional shim washers to take up the slack.

Make up three pushrods as shown in the drawing, using three threaded rods 4618.51 (2 mm Ø, 75 mm long) and six ball-links 4618.55; the stated dimension refers to the free length between the ball-links.

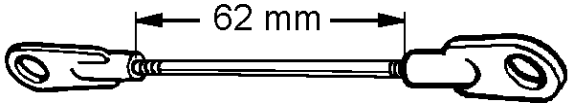

One pushrod should be attached to the rear point of the swashplate linkage; fit it over the guide spigot on the swashplate 4682.45 and press it onto the linkage ball located at its base, then fit the brass sleeve (from 4618.113) on the guide spigot and grease it well. Slide the swashplate onto the main rotor shaft, slipping the pushrod (already connected) down through the opening in the rear of the dome bearing holder; you will need to flex the swashplate guide 4618.113 back carefully to allow the brass sleeve on the swashplate spigot to engage in the guide channel.
Fit the collective pitch compensator on the main rotor shaft, and press the two ball-links onto the linkage balls on the swashplate inner ring; the balls concerned are indicated in the drawing.

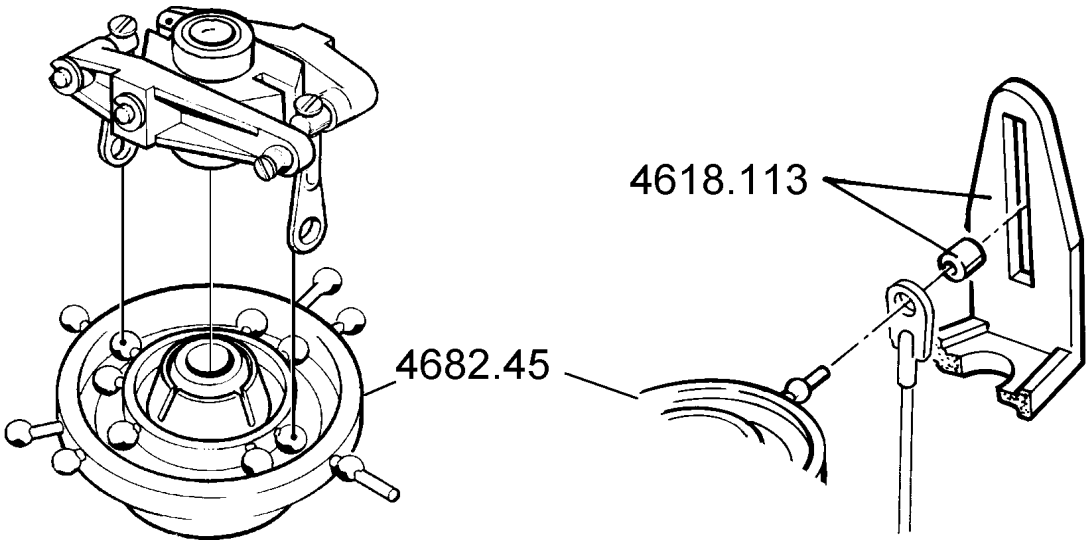

Connect the swashplate servos to the swashplate using the previously prepared pushrods to produce a 120° linkage.

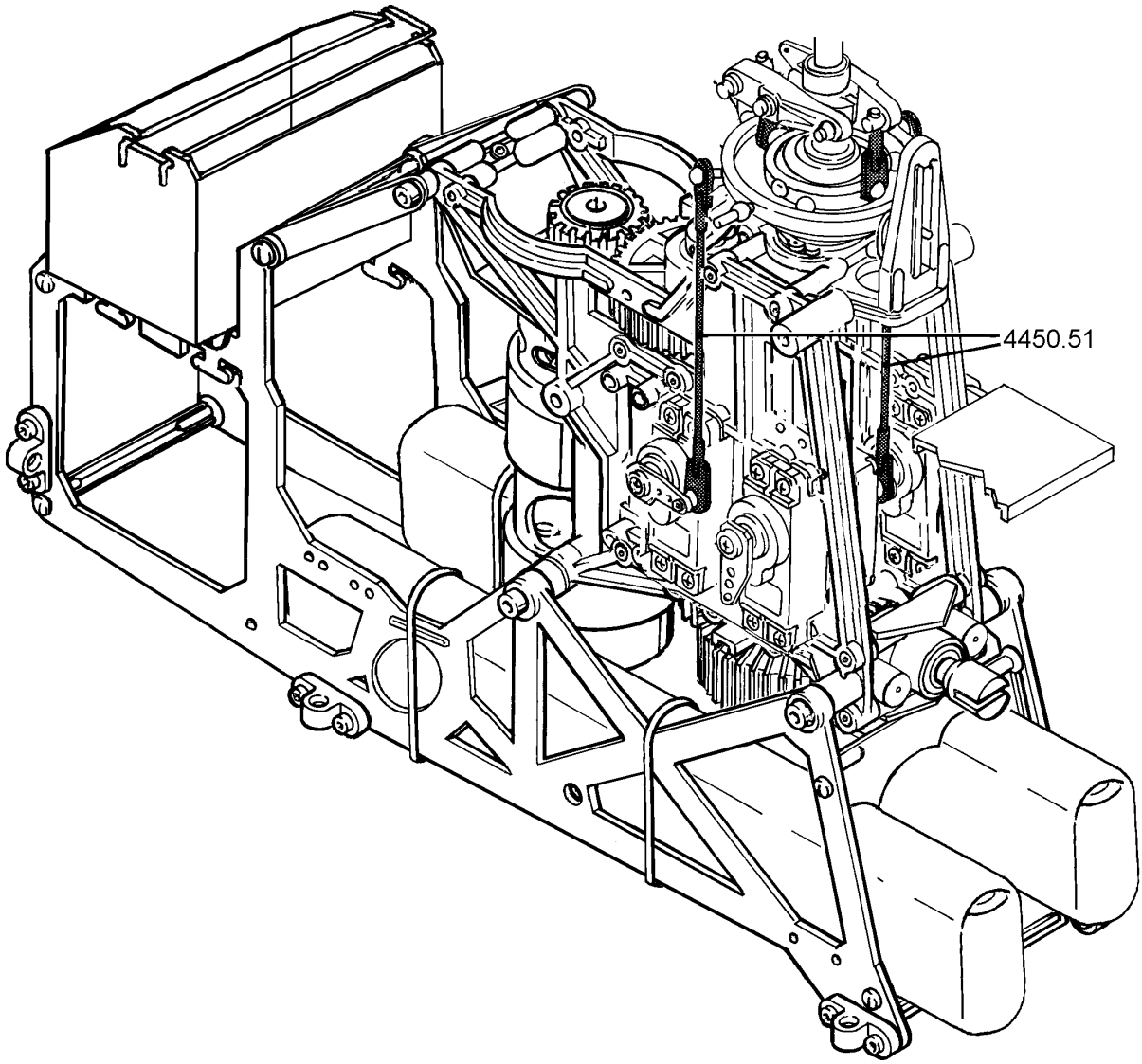

2.2 Installing the remaining radio control system components

To attach the gyro to the gyro platform we suggest using double-sided foam tape, e.g. Order No. 742. Run the cables forward to the receiver, together with the servo leads, along the side of the mechanics.

Pack the receiver battery and receiver in foam rubber and stow them in the RC box; the speed controller can also be mounted in this way, unless you prefer to attach it to the chassis in some other location.

Wrap the leads with spiral tubing and fix them to the mechanics using cable ties. The cables must not be under tension or strain, must not be able to touch any moving or rotating parts, and must not be in danger of chafing on any sharp edges.

Mount the receiving system switch on the switch console, which should be screwed to the right-hand side of the sub-structure. Connect the switch to the battery and receiver.

3. Assembling the main rotor head *(bag UM-10)*

The main rotor head is assembled as shown in the illustrations; be sure to grease all the ballraces.

3.1 Preparing the blade holders

First apply thread-lock fluid to the M3 x 16 screws, then fit them in the brass sleeves (from 4618.32), and allow the fluid to cure completely. The mixer levers 4618.32 should now rotate freely on the brass sleeves; if not, de-burr the holes in the mixer levers. Lubricate the pivots using silicone oil.

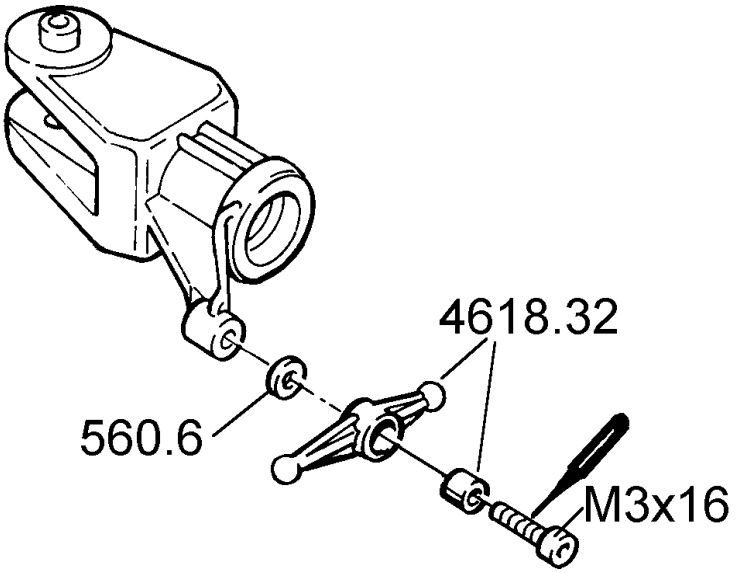

Press the radial ballrace 4607.31 and the bearing shell of the combination bearing 1254.13 into the blade holders 1252.11 as shown in the drawing, pushing them in as far as they will go.

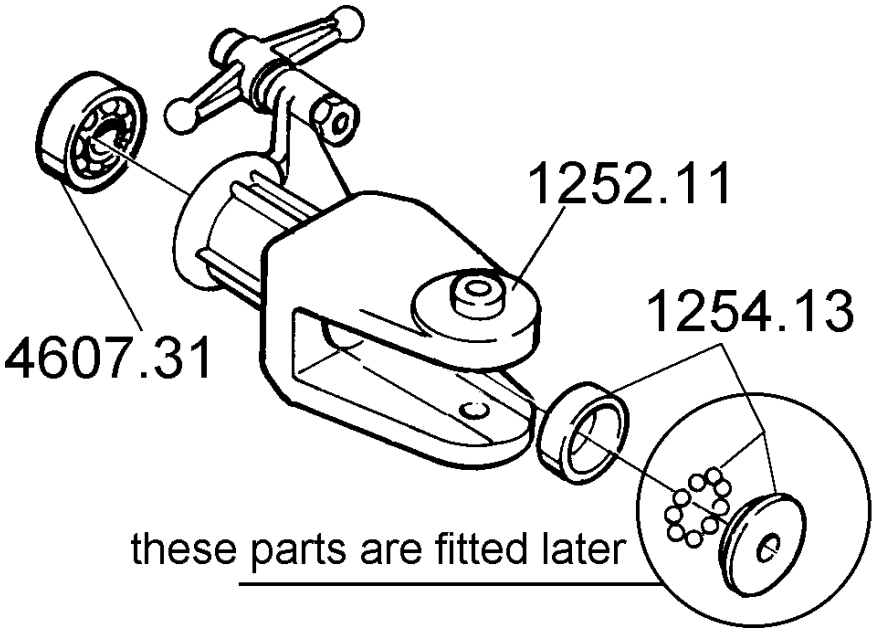

At this point you should check that the ballraces 4607.31 in the prepared blade holders can be fitted easily onto the blade pivot shaft 4607.29; you may need to rub down the blade pivot shaft using fine abrasive paper (600-grit or finer) until the bearings are a sliding fit.

3.2 Installing the blade holders

Press the two O-rings 4607.28 into both sides of the rotor head centre piece 4682.26, then grease the blade pivot shaft and slide it through to the point where it projects by an equal amount on both sides. Check that the O-rings are not pushed out of place when you fit the pivot shaft.

Now hold this assembly with the blade pivot shaft standing vertical. Fit a 0.2 mm shim washer (from 4450.56) on the top end of the shaft, followed by a blade holder, noting that the blade holder must be the right way round: the blade pitch arm and mixer lever must be located *in front of* the blade (see drawing). The top end of the blade pivot shaft must now project into the bearing shell of the combination bearing 1254.13.

Now pack the bearing shell with grease, and press exactly 14 steel balls into place; the grease will prevent them rolling around and getting lost.

During the whole of this procedure the blade pivot shaft must project into the bearing shell to the point where the balls cannot fall inward, between the blade holder and the blade pivot shaft.

Place the thrust washer of the combination bearing on top, with the ball channel on the inside, and tighten the M5 x 12 socket-head cap screw to secure the parts.

Now turn the assembly over, so that the blade holder you have just fitted is at the bottom. Fit a 0.2 mm shim washer on the blade pivot shaft, followed by the second blade holder.

Take great care that the blade pivot shaft is not pushed back through the centre piece and blade holder, otherwise the balls may fall out of the combination bearing you have just assembled!

Install the second combination bearing as described above, and tighten the second M5 x 12 socket-head cap screw.

Check the blade holders for freedom of movement, tapping a screwdriver handle on the blade holders and centre piece to settle the bearings correctly into place; they must not be under tension or strain.

The blade holders will not rotate freely if they are pushed up against the centre piece; in this case a spacer washer 4450.57 must be fitted between the thrust washer of one of the two combination bearings and the blade pivot shaft.

Take care when dismantling the combination bearing to avoid the balls falling out!

Once you are confident that the blade holders rotate freely and smoothly, apply a drop of thread-lock fluid to the M5 x 12 socket-head cap screws and tighten them fully and permanently. If a brass spacer washer 4450.57 has been fitted, ensure that the socket-head cap screw is tightened with great care to avoid distorting the washer.

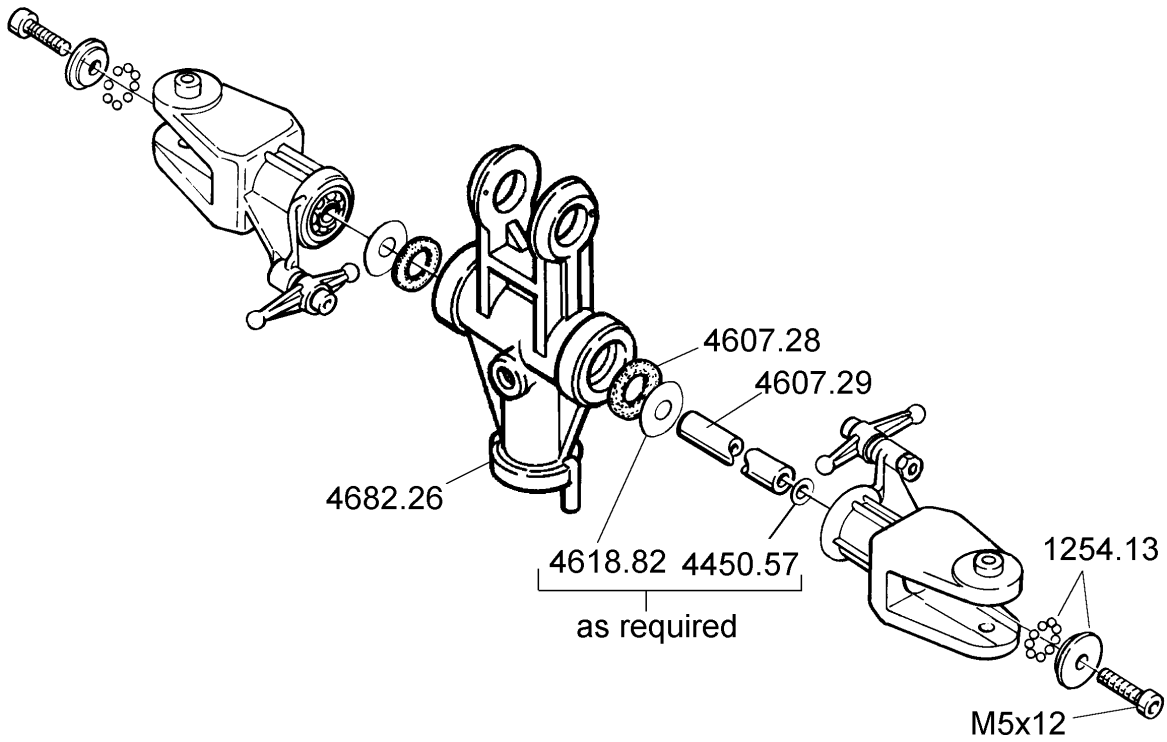

3.3 Installing the auxiliary rotor

Assemble and install the rocker 4618.27 as shown in the drawing. The hole in the pivot pin 4618.28 must line up with the through-hole in the rocker, so that the flybar can be fitted through it later without jamming or binding. Secure each ballrace by fitting an M2 x 4 screw in the centre piece on each side. Check that the rocker swivels freely.

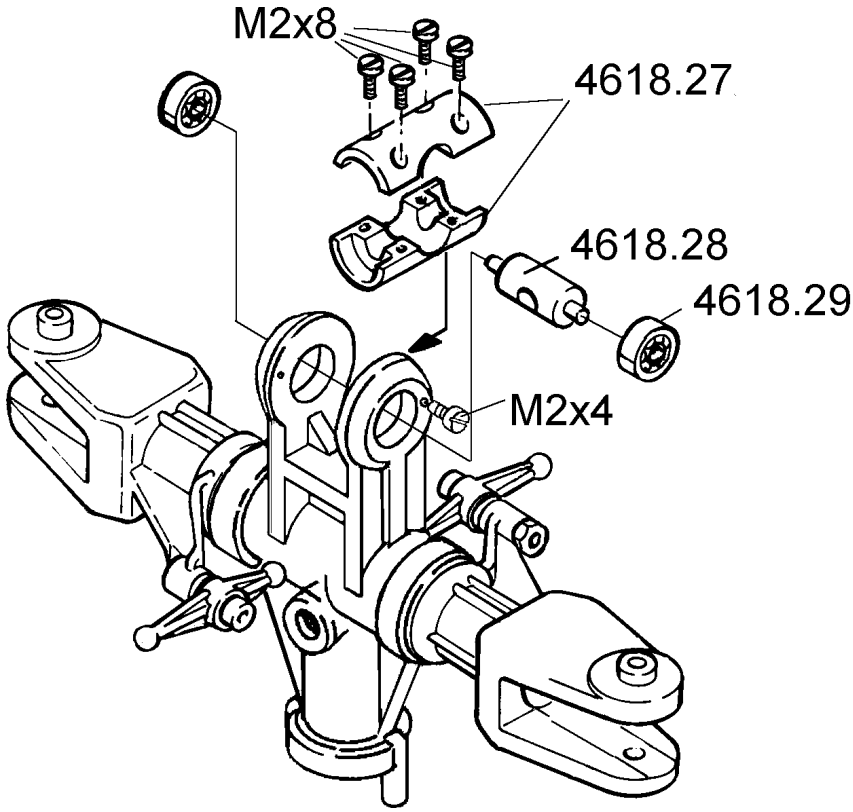

Press the ballraces 4618.6 into both sides of the rocker. Slide the flybar 4718.67 through the rocker and set it exactly central, so that it projects by an equal length from both bearings.

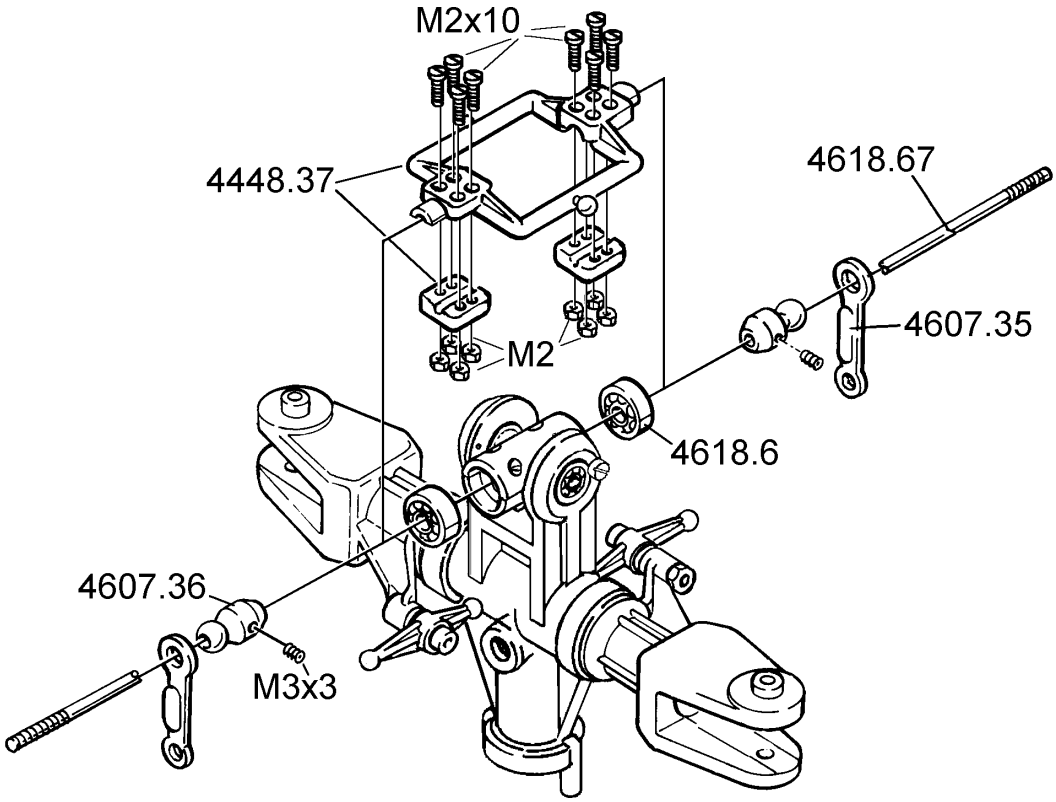

Roughen the flybar with abrasive paper at the point where the control bridge 4618.37 will be clamped, and screw the control bridge in place, applying thread-lock fluid between flybar and control frame; this prevents the flybar rotating in the control bridge during violent aerobatic manoeuvres. Slide the ball collets 4607.36 onto both ends of the flybar and position them butting up against the control bridge. The ball collets are secured with M3 x 3 grubscrews, but be sure to apply thread-lock fluid to the threaded holes in the collets before fitting the screws. Press the double ball-links 4607.35 onto the ball collets as shown.
Apply thread-lock fluid to the holes in the paddles 4682.34, and screw them onto the ends of the flybar to a depth of exactly 15 mm. Set the paddles exactly parallel to each other and to the control bridge.

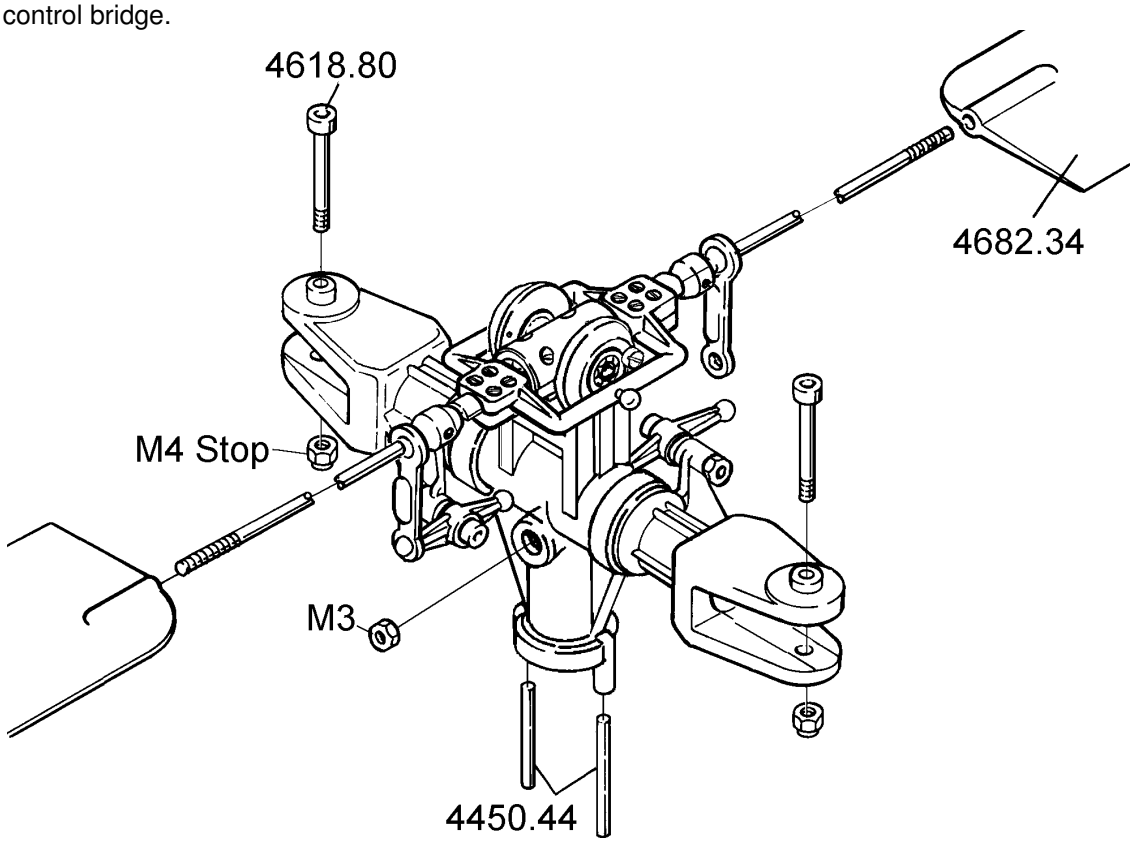

Press an M3 nut into the recess in one side of the rotor head centre piece. Apply thread-lock fluid to the two guide pins 4450.44 for the collective pitch compensator and push them into place.

Make up two straight and two cranked pushrods as shown in the drawing.

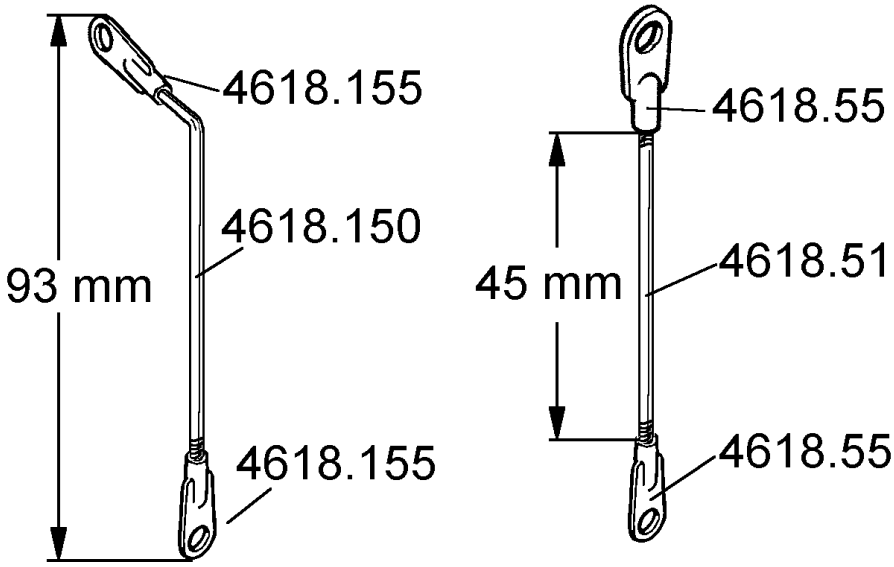

3.4 Installing the main rotor head

Fit the main rotor head on the main rotor shaft.
Ensure that the hole in the rotor head lines up with the top cross-hole in the main rotor shaft, then fit the special screw 4618.87 and tighten it firmly to retain the rotor head.

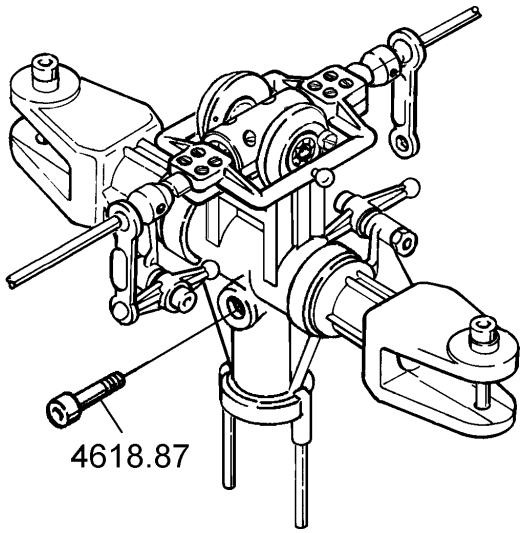

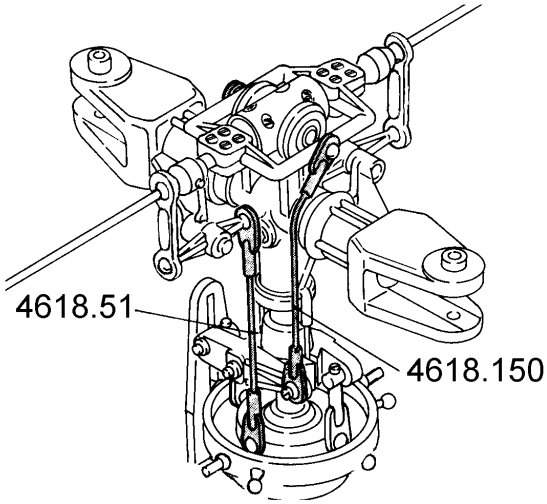

Connect the previously prepared pushrods 4618.150 and 4618.151 as shown in the drawing. Note that the two arms of the mixer levers 4618.32 are of different length. The double ball-links attached to the flybar must be pressed onto the longer arms of the levers; the short pushrods run from the shorter inner arms to the swashplate.

The cranked pushrods 4618.150 now have to be adjusted to obtain the maximum possible collective pitch range. This is the procedure:

Slide the swashplate up as far as it will go, disconnecting the ball-links on the outer ring if necessary.
The swashplate should just make contact with the collective pitch compensator when the compensator itself butts up against the bottom edge of the main rotor head.

If this is not the case, adjust the cranked pushrods as follows:

- The swashplate strikes the collective pitch compensator, but there is clearance between the collective pitch compensator and the rotor head: -> shorten both pushrods.

- The collective pitch compensator strikes the rotor head, but there is clearance between the swashplate and the compensator: -> lengthen both pushrods.

In either case it is essential that you always alter both pushrods by exactly the same amount, so that they remain the same length.

Now carry out the fine adjustment of the auxiliary rotor: the Hiller paddles must be parallel to the swashplate when the swashplate is exactly horizontal. If necessary, carry out a correction by adjusting the pushrods 4618.150 by the same amount; never adjust one pushrod on its own!

4. Assembling the tail rotor gearbox *(bag UM-11, 11A)*

Fit the bevel gear 4618.38 on the tail rotor shaft 1221, as shown in the drawing. Apply thread-lock fluid to the threaded holes in the bevel gear, then tighten the M3 x 3 grubscrews; note that one of the two grubscrews must engage squarely on the machined flat in the tail rotor shaft. Don't over-tighten the grubscrews - the bevel gear could then be forced out of shape and run out of true. Fit the spacer sleeve 4450.28 and the ballraces 4618.69 and 4450.22 on the tail rotor shaft, pushing them hard up against each other. Push this assembly into the tail rotor housing 4618.73 as far as it will go, and secure it with the M2 x 4 retaining screw. Check that there is absolutely zero axial play in the shaft; fit 5/10 x 0.1 mm shim washers to take up any slack if necessary. Dismantle the assembly again, apply bearing retainer fluid, Order No. 951, to the bearings and slide them into place. Assemble all the parts again permanently.

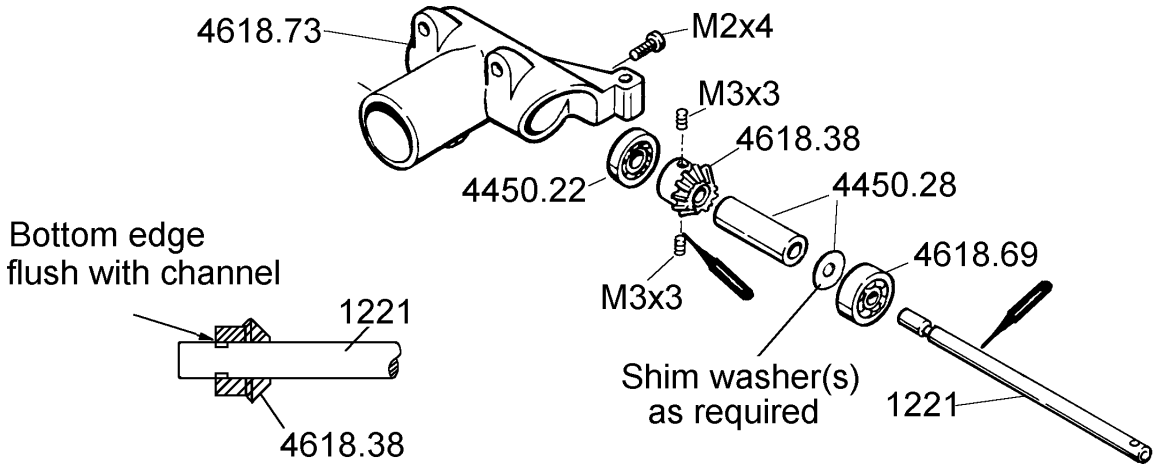

Fit the ballraces 4618.69 and the spacer 4618.66 on the tail rotor input shaft 4448.40 as shown in the illustration. Apply bearing retainer fluid, Order No. 951, before fitting the bearings.
The bearings must not be under stress; if necessary tap on them using a screwdriver handle or similar, so that they automatically seat correctly on the shaft. Allow the bearing retainer fluid to dry.
Fit a 5/10x0.1shim washer and a bevel gear 4618.38 on the tail rotor input shaft 4448.40 as shown in the illustration without using bearing retainer fluid at this stage.
Fit and tighten the M3 x 3 grubscrews in the bevel gear. Note that one of the two grubscrews must engage squarely on the machined flat in the tail rotor input shaft.

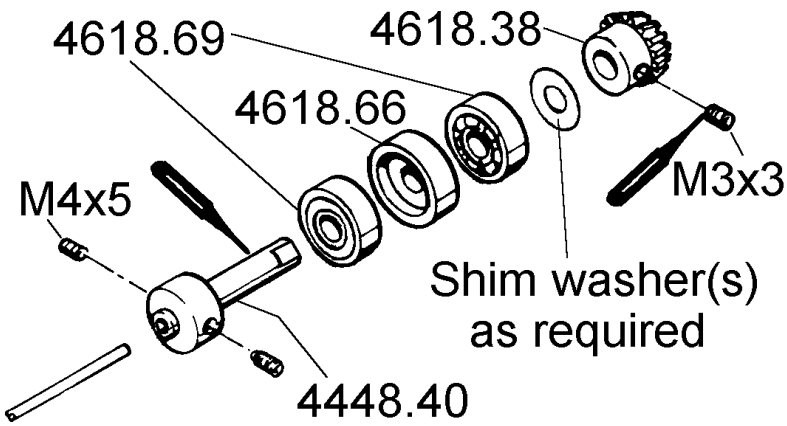

Now fit the prepared drive shaft assembly into the tail rotor housing, and line up the hole in the spacer 4618.66 with the hole in the tail rotor housing, then secure it with an M2 x 5 countersunk screw.
Fit a steel rod (screwdriver blade or similar) through the threaded holes in the coupling 4448.40. Using the rod as a handle, pull hard on the coupling (against the countersunk screw joint), so

that the tail rotor drive assembly seats itself in the housing with maximum possible gear meshing clearance between the bevel gears, as if under maximum load. Now check that the tail rotor gearbox runs smoothly, with just detectable meshing clearance in the bevel gears.

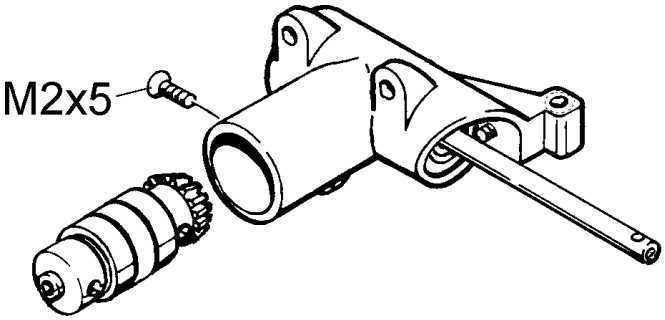

If the play in the gears is too slight, i.e. the gears are stiff to move, you will need to remove the drive assembly again and remove the shim washer under the bevel gear. If, however, there is too much play in the gear meshing insert additional shim washers. If you work carefully, making small adjustments, it is possible to set up the bevel gears so that they work freely but **without** backlash. Reinstall the unit, repeat the pulling procedure as described above, and you should find that the gear meshing clearance is correct.

***Note**: if you still cannot set the gear meshing clearance to your satisfaction, the problem may be that the bevel gear on the tail rotor shaft is located too far outward due to manufacturing tolerances, and is not engaging correctly with the bevel gear on the input shaft. If this is the case, you will find that the tips of the teeth of the bevel gear 4618.41 are already fouling the spacer sleeve 4450.28A, and yet there is backlash in the meshing clearance. In this case you must fit the shim washers between the bevel gear 4618.38 and the bearing 4450.22, instead of between the spacer sleeve and the bearing 4618.69, until the desired slight meshing clearance is present.*

Now remove both assemblies again, apply bearing retainer fluid, Order No. 951, to the bearings, the setscrews, and the bevel gear on the input shaft, re-fit them on the tail rotor shaft and the input shaft, and assemble the parts permanently.

Fit a 3 mm Ø washer and the tail rotor bellcrank 4618.60 on the M3 x 22 socket-head cap screw as shown.

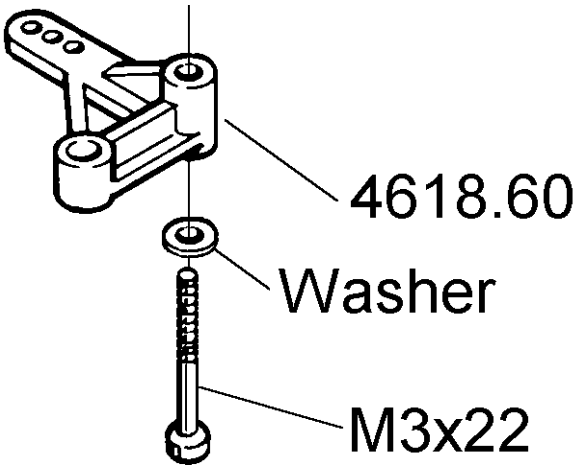

Check that the bellcrank rotates smoothly on the screw; if necessary de-burr the hole in the bellcrank and lubricate it with silicone oil. Fit the screw (with bellcrank fitted) into the hole in the shoulder of the tail rotor housing and tighten it by a few turns; don't tighten it fully at this stage, because the control bridge must first be installed as described in the next section.

5. Installing the control bridge *(bag UM-11B)*

Press the ballraces 4607.137 into the control ring 4618.62 as far as they will go. Apply a little thread-lock fluid to this assembly (don't let it run between control ring and control sleeve!) and push it onto the control sleeve (from 4618.61) in such a way that the inner ring of the ballrace butts up against the flange of the control sleeve.

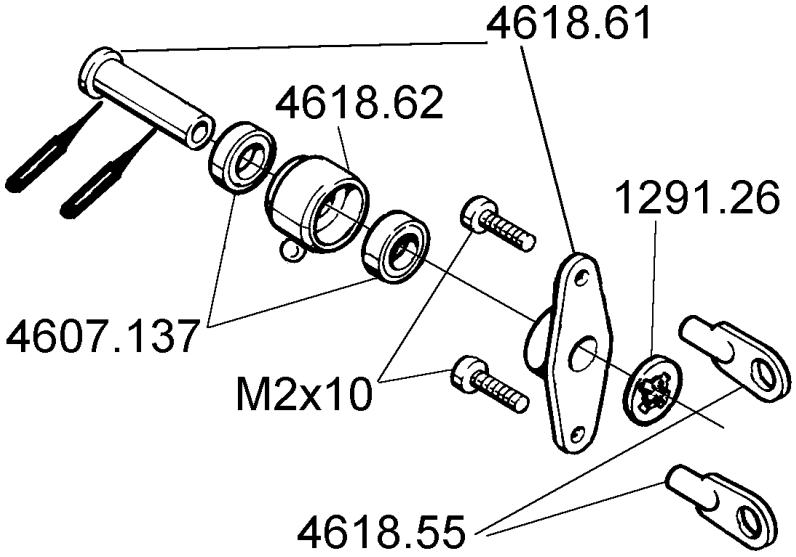

Attach the two ball-links 4618.55 to the control bridge (from 4618.61), fit the bridge on the control sleeve and press it against the inner ring of the other ballrace. Fit the shakeproof washer 1291.26 on the control sleeve and press it against the control bridge.
Now check that the control ring is free to rotate on the control bridge, but that there is absolutely no axial play present. If the ring is stiff to move, there is probably tension between the two ballraces; this can usually be corrected by tapping with a screwdriver handle, as already described.
Fit the control bridge on the tail rotor shaft, then fit the bellcrank over the ball on the control ring and tighten the M2 x 16 screw; the bellcrank and the control bridge should now rotate freely, but without slop.

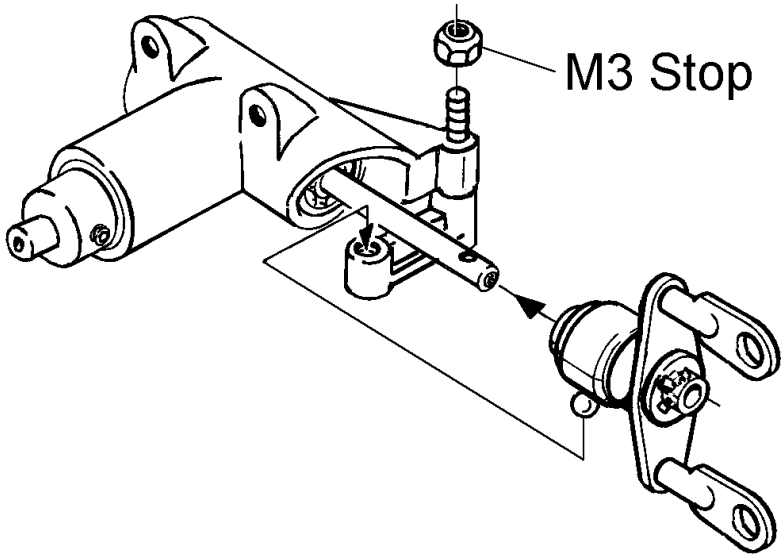

6. Assembling the tail rotor head *(bag UM-11C)*

The tail rotor head is assembled as shown in the drawing; be sure to grease all the bearings.

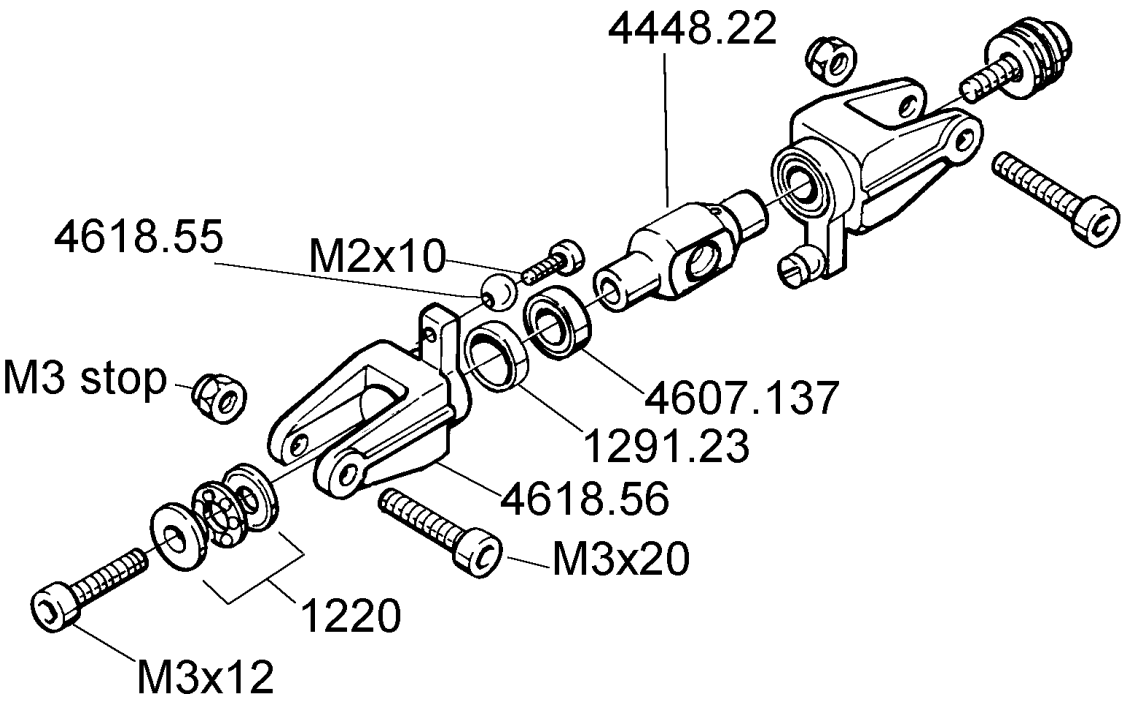

Fit the two O-rings in the hub 4448.22 and check that they rest snugly in the two channels. Oil the rings, and fit the tail rotor head on the tail rotor shaft with the cross-hole in the shaft lined up with the hole in the hub. Push the dowel pin 4448.22 through the holes, and fit the M3 x 3 grubscrew in turn to secure the pin.
Check that the hub is the right way round, as shown in the drawing.
Fix the tail rotor blades in the blade holders using two M3 x 20 screws. Tighten the tail rotor blade retaining screws just to the point where the blades can still swivel, so that they are able to take up their optimum position naturally when rotating.
Note the orientation of the tail rotor blades: the tail rotor rotates clockwise (bottom blade forward) when viewed from the left-hand side; the blade pitch arms on the blade holders must be forward of the blades.

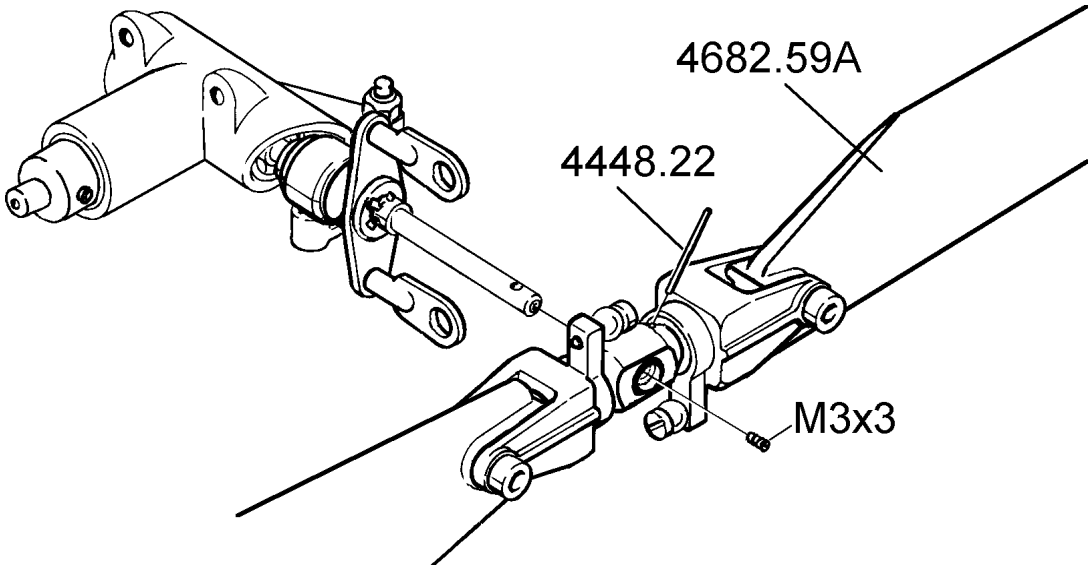

7. Tail boom *(bag SR-0)*

7.1 Assembling the tail boom struts *(bag SR-1)*

Press two strut ends 1292.11 into each of the two aluminium tail boom struts 4445.8 as far as they will go, and set them parallel to each other. Drill 1.5 mm Ø pilot-holes in the struts where the strut ends are located, and fit 2.2 x 6.5 mm self-tapping screws to secure the ends.

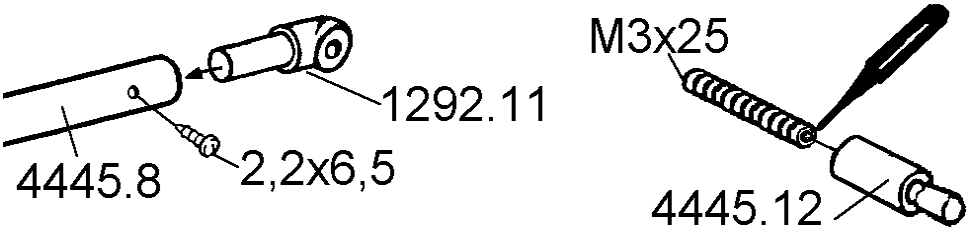

Apply bearing retainer fluid to the M3 x 25 studs, and screw them into the two cabin stand-off pillars 4445.12. Screw them in as far as they will go, and allow the fluid to cure fully.

7.2 Preparing the mechanics to accept the tail boom

Fix the tail boom mounting bracket 1292.5 to the bearing holder 4448.14 (part of the main mechanics) using two M3 x 16 socket-head cap screws. Press the M3 x 12 socket-head cap screw and M3 nut into the clamp and temporarily tighten the screw. Undo the screw again to the point where the tail boom can be slid into place later.

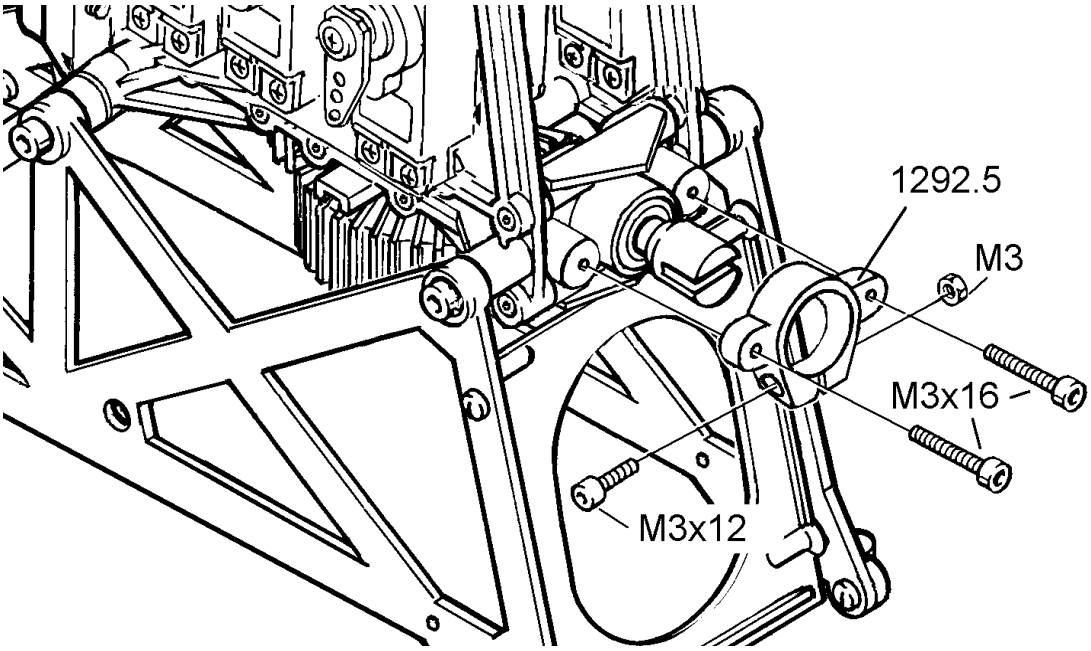

7.3 Preparing the tail boom *(bag SR-2)*

The tail boom features a curve at the *front* end, with the effect that the tail boom rises towards the tail rotor. This has a dual purpose: it increases the tail rotor ground clearance, and also means that the tail rotor drive shaft runs in a broad curve, and therefore cannot run out of true. Push the two shaft bushes 1292.10A into the tail boom 4445.9 using a tool such as a length of beech dowel: the front bush should be 200 mm from the front end of the boom, the rear bush 300 mm from the tail end; the spherical recess of each bush should face forward. Now press the guide ring 4451.7 into the tail boom from the front, with the tapered opening facing the tail, and position it exactly 27 mm from the front end of the tail boom. The purpose of this ring is to guide the retaining sleeve accurately over the yoke of the quick-release coupling.

The front shaft coupling can now be prepared. Note that it must be possible for the coupling to engage perfectly inside the tail boom without you observing the process or helping with tools - both of which are impossible. For this reason it is important to ensure that the brass coupling sleeve 4618.58 is an easy sliding fit over the coupling yoke 4618.57. Remove any rough edges from the yoke, and reduce its diameter slightly with fine abrasive paper if necessary. Fit the tail rotor drive shaft, Order No. 4451.19, fully into the coupling sleeve, so that the pre-formed end rests inside the sleeve. Now fit a grubscrew in the collet 56.0 and slip it onto the tail rotor shaft behind the sleeve. Push the tail rotor shaft into the coupling yoke as far as it will go, then slide the sleeve over the yoke in the same way. Position the collet about 1 mm behind the sleeve, and tighten the grubscrew to fix it to the tail rotor shaft.

7.4 Completing the tail boom

Fit the tail rotor bracket 1292.7 on the rear end of the tail boom, and fit the strut bracket 1292.6 on the boom from the front, as shown in the drawing. Note that the gap (clamp section) of the strut bracket must be at the top, with the integral bored lug on the left-hand side.

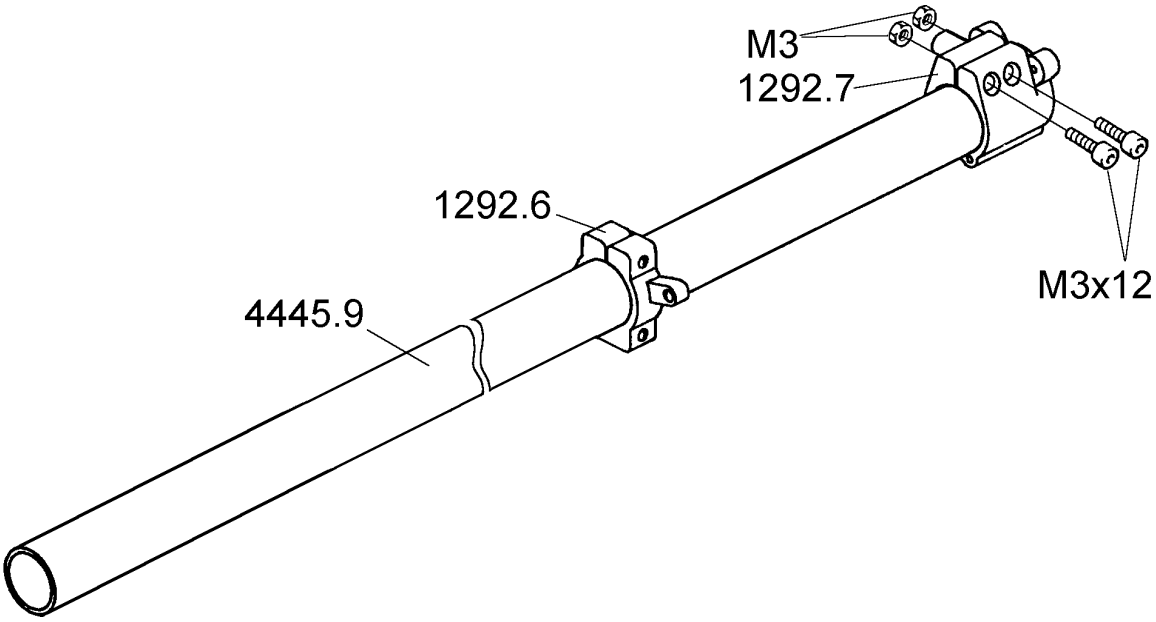

7.5 Checking the length of the tail rotor drive shaft

Remove the tail rotor drive shaft from the mechanics, oil it lightly and slip it through the shaft bushes, rotating it all the while, until the rear end exits the tail end of the boom and can be fitted into the tail rotor coupling. Slide the shaft in as far as it will go, then pull it back by 1 mm and temporarily tighten the grubscrews to secure the coupling. (In use the front end of the tail rotor shaft must have about 1 mm clearance in the coupling yoke, and this is obtained automatically when the shaft is eventually pushed into the tail rotor coupling as far as it will go.) The tail boom can now be fitted temporarily into the tail boom bracket 1292.5; push the tail boom fully onto the bearing holder 4448.14 and secure it by tightening the clamp in the boom bracket. Fit the tail rotor into the rear end of the tail boom, and rotate the tail rotor drive shaft to ensure that it engages in the quick-release coupling on the main gearbox at the front end. It should now be possible to push the tail rotor into the tail boom to the point where it butts up against the bracket, without the drive shaft fouling the end of the quick-release coupling at the front. If this is not possible, the tail rotor shaft needs to be shortened; alternatively you can re-position the tail rotor gearbox bracket 1292.7 slightly further aft. When you are satisfied, remove the tail boom from the mechanics again.

7.6 Connecting the tail boom to the mechanics

Withdraw the tail rotor from the tail boom to the point where the shaft coupling becomes accessible. Undo the grubscrews in the shaft coupling so that the tail rotor shaft 4451.19 can be pulled out of the coupling. Now carefully de-grease the shaft, push it into the shaft coupling as far as it will go and tighten the grubscrews to secure it. This is the procedure: first remove the grubscrews from the coupling entirely, apply thread-lock fluid, Order No. 952, or bearing retainer fluid, Order No. 951, to the threaded holes, then fit the grubscrews again and tighten them fully. If possible, grind a flat in the shaft at the engagement point of the grubscrews on one side, to optimise the strength of the joint. Fix the tail rotor to the tail rotor gearbox bracket 1292.7 using three 2.9 x 13 mm self-tapping screws. Apply a little grease to the quick-release coupling and to the front end of the tail rotor shaft.
Fix the struts to the left and right mechanics side frames using the stand-off pillars 4445.12 prepared in Section 7.1.

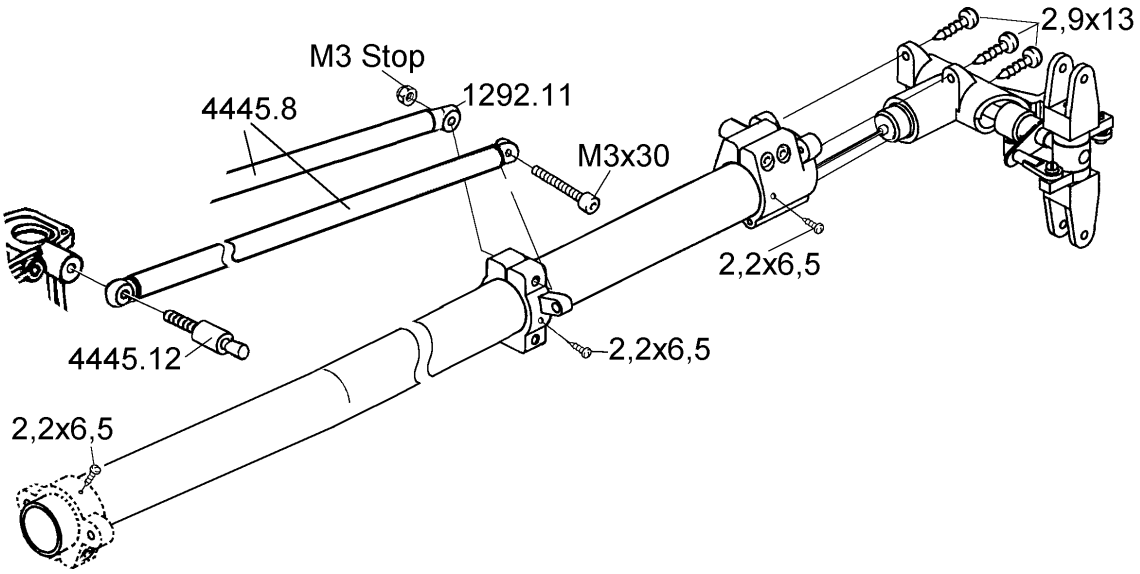

The complete tail boom assembly can now be pushed into the mounting bracket 1292.5 as far as it will go, checking carefully that the quick-release coupling engages correctly. Rotate the tail boom so that the tube curves upwards, with the curve exactly in the vertical plane when viewed from the tail. Rotate the tail rotor bracket so that the tail rotor shaft is at right-angles to the main rotor shaft when viewed from the tail. Tighten the M3 x 12 socket-head cap screw in the mounting bracket to clamp the boom in its final position. We recommend that you hold the tail boom pointing vertically upwards while you tighten the clamping screw.
Adjust the position of the rear tail boom strut bracket 1292.6 so that the tail boom struts 4445.8 can be attached to it using an M3 x 30 mm socket-head cap screw and M3 self-locking nut, as shown in the drawing.
Lay the mechanics on a completely flat table or bench and slide the strut bracket forward or aft until the distance between the bottom edge of the tail rotor bracket 1292.7 and the table top is about 170 mm; tighten the clamping screw in the strut bracket firmly in this position, then drill 1.5 mm Ø holes through the tail rotor bracket 1292.7, the strut bracket 1292.6 and the tail boom bracket 1292.5 and into the tail boom. Fit 2.2 x 6.5 mm self-tapping screws in the holes and tighten them to prevent any of the parts shifting or rotating in flight.

7.7 Stabiliser panels *(bag SR-3)*

Fix the vertical stabiliser 1292.4 to the tail rotor bracket using 2.9 x 13 mm self-tapping screws, and fix the horizontal stabiliser to the tail boom with the bracket and pushrod guide, using 2.9 x 19 mm self-tapping screws. Position the horizontal stabiliser bracket 200 mm forward of the tail rotor bracket, and set the horizontal stabiliser at right-angles to the vertical stabiliser. Tighten the screws firmly.

8. Installing the skid landing gear *(bag SR-4)*

Fit the skid tubes 4447.7 through the skid bars 4447.6 and slide them along until the distance between the fixing screw holes is 207 mm.

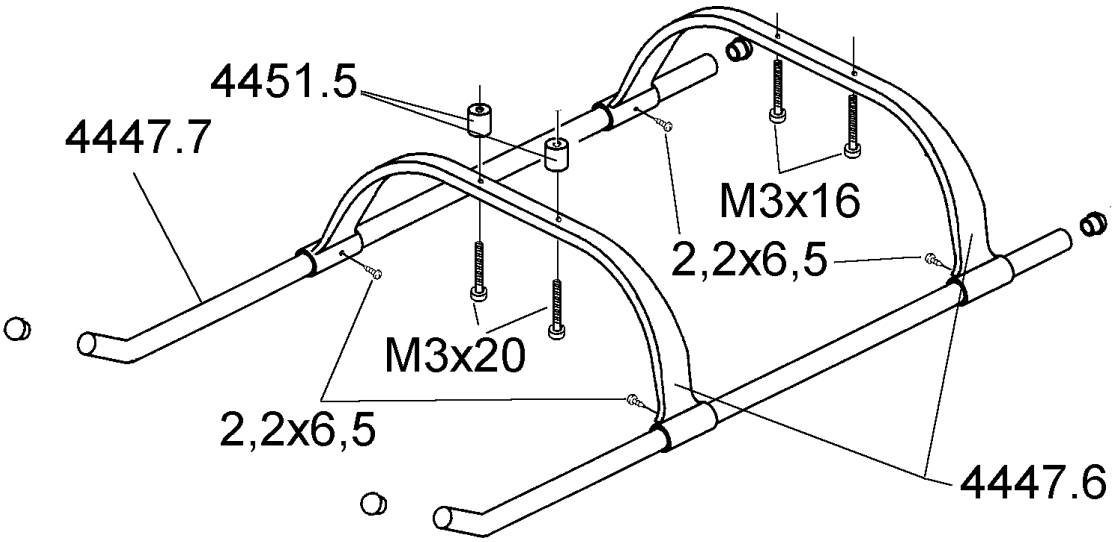

The skid landing gear can now be attached to the model using two M3 x 16 socket-head cap screws at the rear and two M3 x 20 socket-head cap screws at the front; don't forget to fit the spacer sleeves 4451.5 at the front as shown. Set the skid tubes exactly parallel to each other, and slide them through the skid bars until they both project by about 50 mm beyond the rear skid bars. The skids are fixed to the skid bars using 2.2 x 6.5 mm self-tapping screws fitted from the inside as shown; drill 1.5 mm Ø pilot-holes through the skid bars and into the skids before fitting the screws. Epoxy the sealing plugs in the skid tubes.

9. Tail rotor control system *(bag SR-5)*

To connect the tail rotor pushrod 4451.3, loosen the screw in the tail rotor bellcrank 4618.60, and slip the plain end of the tail rotor pushrod forward through the guide holes in the tail rotor gearbox bracket and the horizontal stabiliser bracket. If the pushrod is stiff to move in the tail rotor gearbox bracket, open up the hole in the bracket to 2 ... 2.5 mm Ø. Connect the pushrod to the outermost hole in the bellcrank, then tighten the bellcrank screw again.
Push two rubber grommets onto the rear end of the CFRP guide tube, and position them about 20 mm from the end, spaced about 3 mm apart. The guide tube can now be slipped onto the pushrod from the front until it rests on the strut bracket 1292.6. Secure it in this position by fitting a cable tie round the tail boom and the guide tube, between the rubber grommets.

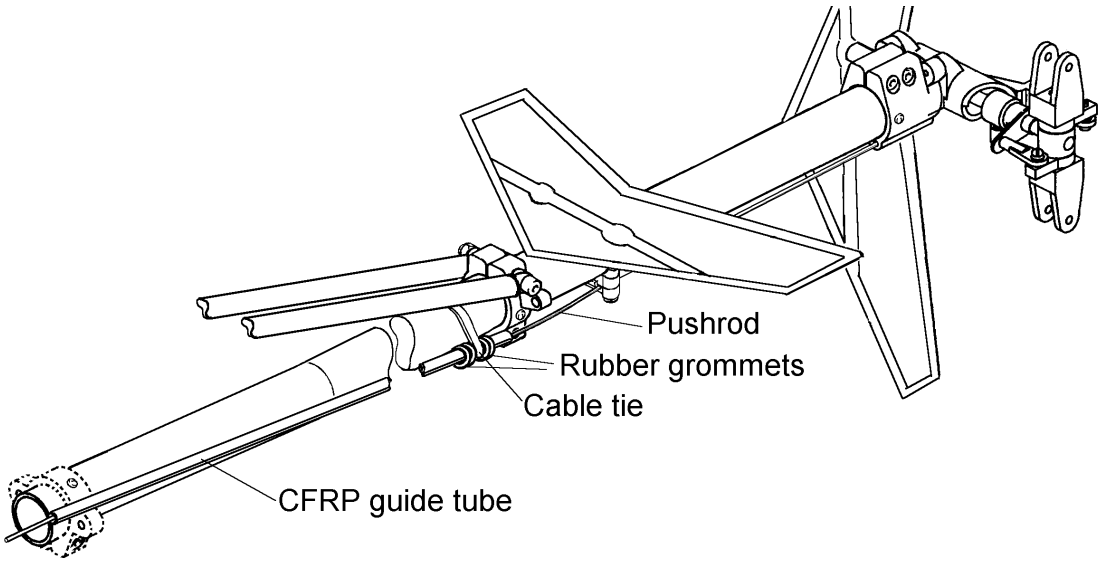

The forward end of the guide tube is *not* supported against the tail boom; instead it „floats“ freely on the pushrod; for this reason it should not be shortened further than is absolutely necessary, i.e. extend it as close as possible to the servo.
At the front end the pushrod is connected to the tail rotor servo using a soldered-on threaded coupler with a clevis screwed onto it. Shorten the wire pushrod before soldering it into the threaded coupler; when the pushrod is completed and the system connected, the output arm of the tail rotor servo should point vertically down, and the tail rotor bellcrank should be at right-angles to the tail boom, when the collective pitch servo is at the centre setting.
Alternatively the front end of the pushrod can be formed into a Z-shape using Z-bend pliers (Order No. 5732), although please note that the right-angle bend must be positioned very accurately, because this arrangement provides no means of subsequent adjustment. This alternative is therefore only recommended to the experienced modeller. The advantage is that the guide tube can be extended very close to the servo, because the clevis and threaded coupler which require the usual stand-off are not present.

10. Cabin *(bag SR-6)*

10.1 Installing the front cabin support system

Fix the two cabin stand-off pillars to the brackets at the front of the sub-structure by fitting M3 x 12 socket-head cap screws from the rear.

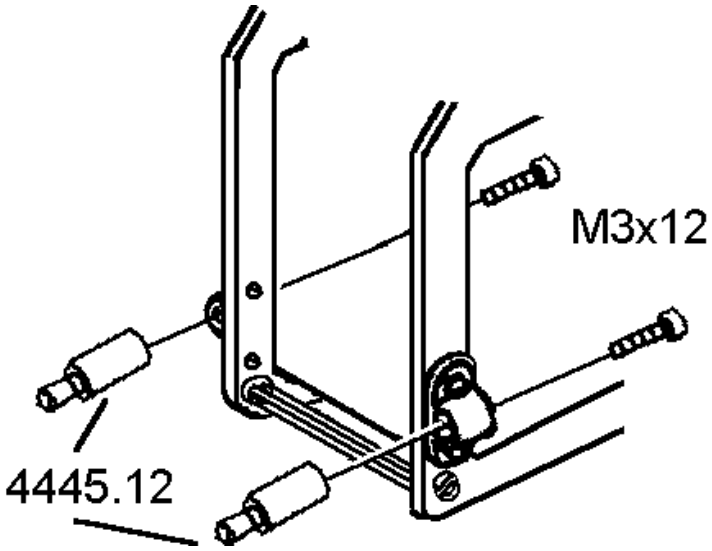

10.2 Attaching the cabin

Press two rubber grommets 3515.3 into the holes in the former 4445.17, and secure them with a drop of cyano on one side. Push the former onto the pillars mounted at the front of the mechanics, with the curved side at the bottom, and check that the pillars engage completely in the rubber grommets.
Press two rubber grommets in the 7 mm Ø holes in the cabin. Slip the cabin over the mechanics from the front, and engage the two stand-off pillars at the top in the rubber grommets in the cabin.
Raise the cabin at the front until the former attached to the mechanics makes contact with the bottom of the cabin moulding.
Glue the former to the cabin in this position using Stabilit express. Allow the adhesive to cure completely, then remove the cabin as follows: first ease it off the rear stand-off pillars at both sides, and then slide it forward; it should come off easily. It should be just as easy to re-fit it by reversing the procedure.

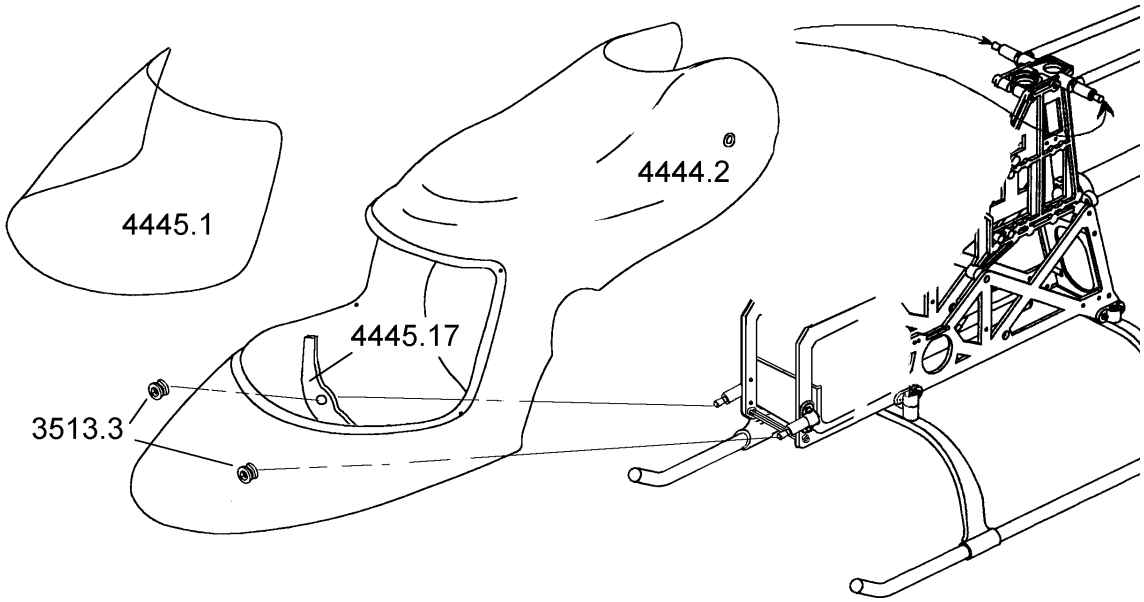

Tape the clear canopy screen 4445.1 to the cabin moulding and then secure it with four 2.2 x 6.5 mm self-tapping screws; alternatively glue it in place use cyano-acrylate or Stabilit express, but be careful not to smear the surfaces with the adhesive.

Run the receiver aerial along the mechanics to a point aft of the front skid bar, so that the cabin can easily be lifted off without snagging the aerial. Fit the plastic guide tube for the aerial through the two loops on the inside of the skid bars, and fit small pieces of fuel tubing on it to prevent it slipping out of the sleeve. The flexible aerial wire can then be run along the skid bar, slipped into the guide tube from the front, and allowed to trail out of the tube at the rear.

11. Main rotor blades

If your rotor blades do not come with the bushes factory-fitted, epoxy the root bushes 4607.164 in the holes in the rotor blades.
When the epoxy has cured, rub down the blades all over using fine abrasive paper, Order No. 700.1 or 700.2.
Ideally the weight of both blades will be identical, as will the Centre of Gravity (balance point) of both blades. You can check this by balancing the blades individually over a triangular-section block as shown in the drawing. Mark the line of balance in both directions; the point where the lines cross is the blade's Centre of Gravity.
In practice it is unlikely that both blades will be identical in this way, and it can be difficult to achieve perfection using ordinary methods. However, this is not crucially important with modern model helicopters. What is crucial is that both blades should possess identical moments when mounted on the rotor head. This means that it is permissible for the blades to be different weights, provided that the difference is compensated by differing blade CGs; the method of balancing them is described in the next section.
Apply clear dope (SPANNFIX IMMUN, Order No. 1408) to the root end of the blades, the area of the doublers (approximately 70 mm long) and the extreme tip (around 20 mm long), and apply a colour finish to those areas. The film is applied to the blades as shown in the drawing; first the top surface, then the underside of the trailing edge, then the rest of the underside, overlapping at the trailing edge. It is important that the film should be applied smoothly, without wrinkles!

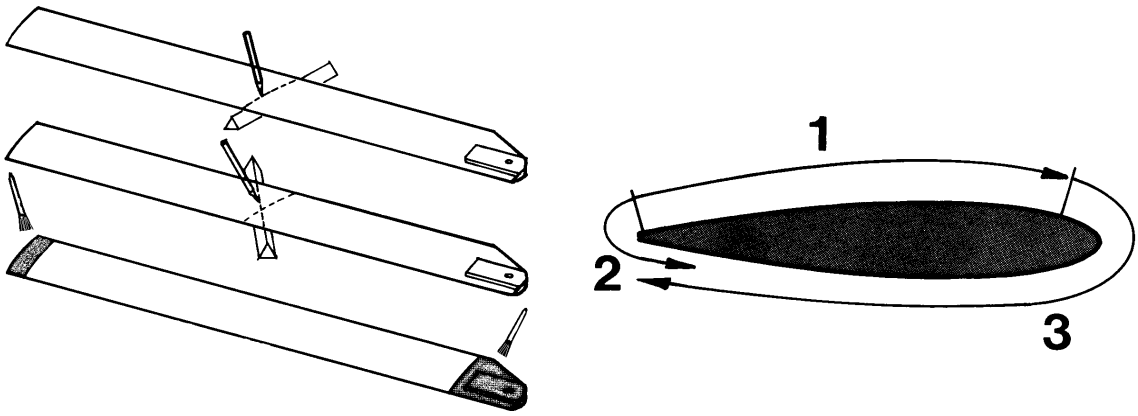

11.1 Balancing the rotor blades

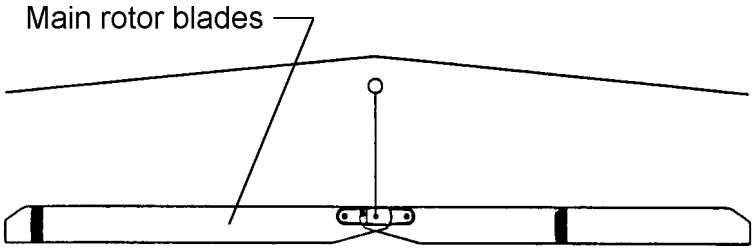

Screw the main rotor blades together as shown, and hang them up on a piece of thread. Apply adhesive tape to the end of the lighter blade until the joined blades hang level.
Balance the blades carefully in this way to ensure that your main rotor does not vibrate when spinning!

12. Setting up

12.1 Setting up the cyclic control system

The basic settings for the roll-axis and pitch-axis control systems should already be correct if you have installed the linkages exactly as described in the instructions. Since the instructions include the lever lengths (correct linkage holes), the final setting up is carried out using the electronic facilities provided by your transmitter. Note that the servo travel should not be set too high, and ensure that the swashplate does not strike its end-stops on the main rotor shaft at either end-point of the transmitter stick travel for roll-axis and pitch-axis movements, as this would mean that the collective pitch control could not move freely in the axial direction.

12.2 Main rotor pitch settings

Main rotor pitch is measured using a pitch gauge (optional accessory, not included in the kit). The following table shows the recommended basic settings, but the optimum values may well vary from model to model according to the rotor blades you are using.

	Minimum	Hover	Maximum
Hovering and practice	-2°	5,5°...6°	12°
Aerobatics	-4°	5°... 5,5°	8°... 9°
Auto-rotation	-4°	5,5°	13°

The best way of setting the correct blade pitch on the transmitter is as follows:

1. Measure the hovering pitch and set it to the correct value.
2. Measure collective pitch maximum and minimum and adjust the values according to the following diagrams using your transmitter's collective pitch curve facility.

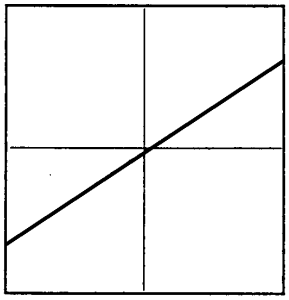

Hover and practice (linear)

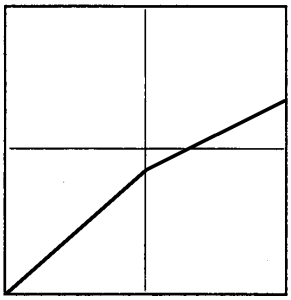

Aerobatics

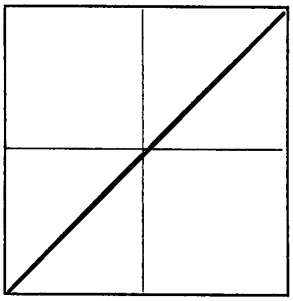

Auto-rotation

12.3 Setting up the motor control system

The following diagrams show two alternative motor control curves:

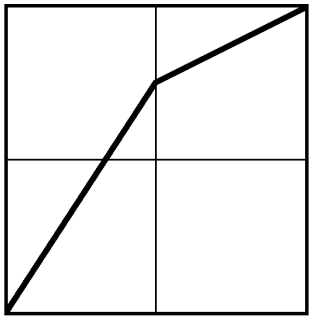

normal

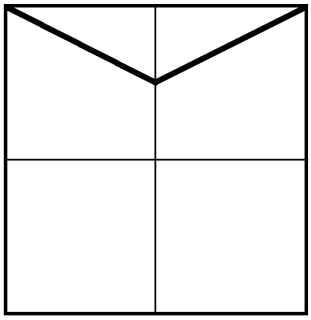

aerobatics

- The „normal“ power curve is suitable both for hovering and normal circuits.
- Since the motor does not stop at any setting of the collective pitch stick when the „Aerobatics“ power curve is set, this curve must only ever be selected when the model is in flight.
- The values stated above can only be a guideline, as they vary greatly according to the motor used; there is no alternative but to fine-tune them during the test-flying programme.

12.4 Further adjustments

If you have made up all the linkages exactly as described in the previous sections, no changes to the mechanical arrangements will be necessary. The following adjustments can all be carried out at the transmitter:

1. **Servo direction**
   Set the „sense“ (direction of rotation) of all servos as stated in the instructions. Check the direction of the speed controller in particular!
2. **Dual Rates**
   You can set switchable travels for roll-axis, pitch-axis and tail rotor. As a starting point we recommend 100% and 75% as the two settings.
3. **Exponential**
   For the basic set-up you should leave all control systems set to „linear“.
4. **Servo travel centre offset**
   Do not make any adjustments to this point. At a later stage you may wish to make minor corrections here.
5. **Adjusting servo travel**
   This is where you can adjust the maximum servo travel. Note that the travels should always be the same on both sides of neutral, otherwise you will end up with unwanted differential effects:

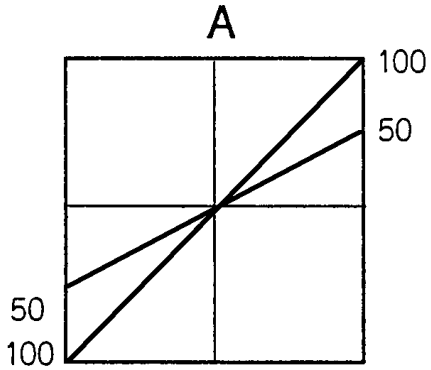

Equal set values:
linear control response

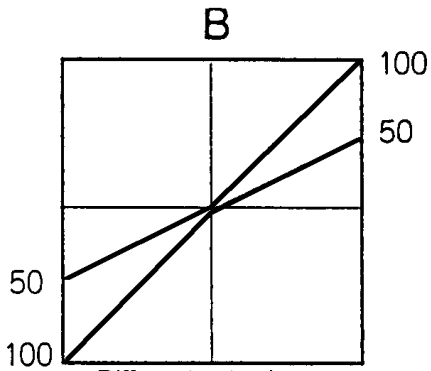

Different set values:
differential control response

Fo
r the swashplate servos (collective pitch function) it is important to check that servo travels are symmetrical, i.e. with the same values for both directions. The collective pitch function of the swashplate servos should produce a range of blade pitch angles covering -5° to +13°, also with symmetrical travels; you may find it necessary to remove the servo output arm, move it round by one spline and fit the retaining screw again.
The mechanics should now be set up virtually perfectly. When the collective stick is at centre (hover point), collective pitch should be about 5.5°, and the speed controller should be at the half-way point between stop and full-throttle.
Note:
The collective pitch and power curves can be adjusted later to meet your exact personal requirements. However, if you have already set differential travels in the basic set-up procedure, as shown in diagram „B" above, any fine adjustments required subsequently will be more difficult!

6. **Collective pitch and power curves**
   These adjustments are of fundamental importance to the flight performance of any model helicopter. The aim of the procedure is to maintain a constant rotor speed when the model is climbing and descending, i.e. regardless of load. This then represents a stable basis for further fine-tuning, e.g. of the torque compensation system etc. (see also „Collective pitch and power curves“).
7. **Static torque compensation**
   The tail rotor servo is coupled to the collective pitch function via a mixer in the transmitter in order to compensate for torque changes when you operate the collective pitch control. On most transmitters the mixer input can be set separately for climb and descent.
   Recommended values for the basic settings are: climb: 35%, descent: 15%.

8. Gyro adjustment

Gyro systems damp out unwanted rotational movements around the vertical (yaw) axis of the model helicopter. They do this by detecting the unwanted motion and injecting a compensatory signal into the tail rotor control system, and in order to achieve this effect the gyro electronics are connected between the tail rotor servo and the receiver. Many gyro systems also allow you to set two different values for gyro gain, and switch between them from the transmitter via a supplementary channel. The extra channel is controlled via a proportional slider or rotary knob, or a switch, depending on the gyro system.

If your gyro features an adjustor box with two rotary pots for two fixed settings, and you can switch between them from the transmitter, it is best to set one adjustor approximately to centre (50%), and the other to 25%. If the gyro system provides proportional control between the two set values, then the one pot should be set to „0", the other to about 80%.

If you have a gyro system whose effect cannot be adjusted from the transmitter, i.e. there is only a single adjustor on the gyro electronics itself, the pot should be set to 50% gain as a starting point.

Check that the direction of the gyro's compensatory action is correct, i.e. that it responds to a movement of the tail boom with a tail rotor response in the opposite direction. If this is not the case, any yaw movement of the model will be amplified by the gyro! Most gyro systems are fitted with a change-over switch which reverses their direction, and this must then be moved to the appropriate position. However, some systems have no such switch, and in this case the solution is to mount the gyro inverted.

One factor which all gyro systems have in common is that flight testing is necessary in order to establish the optimum settings, as so many different factors influence the settings.

The aim of the gyro adjustment process is to achieve as high a level of gyro stabilisation as possible, without the gyro causing the tail boom to oscillate.

13. Final checks before the first flight

When you have completed the model, run through the final checks listed below before carrying out the first flight:

- Study the manual again and ensure that all the stages of assembly have been completed correctly.
- Check that all the screws in the ball-links and brackets are tightened fully after you have adjusted gear meshing clearance.
- Can all the servos move freely, without mechanical obstruction at any point? Do they all rotate in the correct direction relative to the stick movements? Are the servo output arm retaining screws in place and tight?
- Check the direction of effect of the gyro system.
- Ensure that the transmitter and receiver batteries are fully charged. We recommend using a voltage monitor module (e.g. Order No. 3157) to check the state of charge of the receiver battery on the flying field.

Don't attempt to fly the helicopter until you have successfully checked everything as described above.

14. Maintenance

Helicopters, whether large or small, place considerable demands on maintenance. Whenever you notice vibration in your model, take immediate steps to reduce or eliminate it. Rotating parts, important screwed joints, control linkages and linkage junctions should be checked before every flight. If repairs become necessary be sure to use original replacement parts exclusively. Never attempt to repair damaged rotor blades; replace them with new ones.

15. Adjustments during the first flight
Blade tracking

„Blade tracking“ refers to the height of the two rotor blades when they are spinning. The adjustment procedure aims at fine-tuning the pitch of the main rotor blades to exactly the same value, so that the blades rotate at the same level.

Incorrectly set blade tracking, with the blades revolving at different heights, will cause the helicopter to vibrate badly in flight.

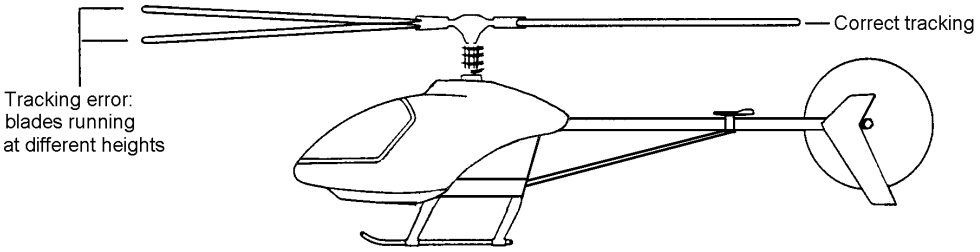

When you are adjusting blade tracking you are exactly in the „firing line“ of the blades, so keep at least 5 metres away from the model in the interests of safety.

You can only check blade tracking if you are able to see clearly which blade is higher and which is lower. The best method is to mark the blades with coloured tape as follows:

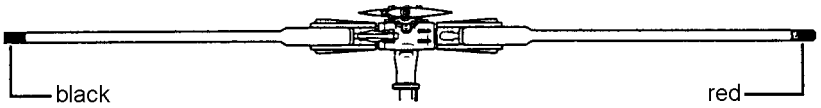

A

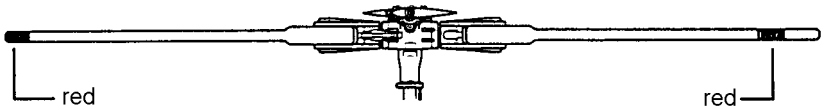

B

There are two alternative methods: figure „A“ shows the use of different colours on the blade tips; fig. „B“ shows the use of the same colour, but applied at different distances from the blade tip.

Procedure for adjusting blade tracking

1. Set the helicopter to the point where it is almost lifting off, then sight directly along the rotor plane.

2. If you can see that the rotor blades are running in the same plane, no adjustment is required; however, if one blade is running higher than the other, the settings must be corrected.

3. Locate the pushrods between the swashplate and the mixer levers; the adjustment is made at the ball-links on both ends of these pushrods: unscrew the links to raise the blade, screw them in to lower it.

16. General safety measures

- Take out adequate third-party insurance cover.
- If at all possible join the local model flying club.

At the flying site:

- Never fly your model above spectators.
- Do not fly models close to buildings or vehicles.
- Avoid flying over agricultural workers in neighbouring fields.
- Do not fly your model in the vicinity of railway lines, major roads or overhead cables.

Pre-flight checks, flying safety:

- Before you switch on the transmitter, check carefully that no other model flyer is using the same frequency.
- Carry out a range check with your RC system.
- Check that the transmitter and receiver batteries are fully charged.
- Do not let the model fly out of safe visual range.

Post-flight checks:

- Clean the model carefully and check that all screws etc. are still tight.
- Look for wear and damage to the helicopter, and replace worn parts in good time.
- Ensure that the electronic components such as battery, receiver, gyro etc. are still securely fixed. Remember that rubber bands deteriorate with age and will eventually fail.
- Check the receiver aerial. Conductor fractures inside the insulation are often not visible from the outside.
- If the main rotor should touch the ground when spinning, always replace the blades. Internal blade damage may not be visible from the outside.
- Never carry the model by the tail boom: too firm a grip will easily deform the tail rotor pushrod.

17. Some basic terms used in model helicopter flying

The term „rotary wing machine“ indicates that the helicopter’s lift is derived from rotating „wings“ which take the form of rotor blades. As a result, a helicopter does not require a minimum forward speed in order to fly, i.e. it can hover.

Cyclic pitch
Cyclic pitch variation is used to steer the machine around the roll and pitch axes. Changing cyclic pitch has the effect of altering blade pitch depending on its position in the circle. The effect is caused by tilting the swashplate, which then effectively tilts the helicopter in the required direction.

Collective pitch
Collective pitch provides control over vertical movement, i.e. for climb and descent. The pitch of both rotor blades is altered simultaneously.

Torque compensation
The spinning rotor produces a moment which tends to turn the whole helicopter in the opposite direction. This effect must be accurately neutralised, and this is the task of the tail rotor. Tail rotor blade pitch is altered to vary torque compensation. The tail rotor is also used to control the model around the vertical (yaw) axis.

Hovering
This is the state in which the helicopter flies in a fixed position in the air, without moving in any direction.

Ground effect
This occurs only when the machine is close to the ground, and it falls off as altitude rises. At an altitude of about 1 - 1.5 times the rotor diameter ground effect is completely absent. Normally the revolving airflow from the main rotor is able to flow away freely, but in ground effect the air strikes an obstacle (the ground) and forms an „air cushion“. In ground effect a helicopter can lift a greater weight, but its positional stability is reduced, with the result that it tends to „break away“ in an unpredictable direction.

Climb
Any excess power above that required for hovering can be exploited to make the helicopter climb. Note that a vertical climb requires more energy than an angled climb which includes forward motion. For this reason a model with a given amount of motor power will climb more rapidly at an angle than vertically.

Level flight
A helicopter absorbs least power when flying straight and level at about half-power. If you have trimmed the machine carefully for a steady hover, it will tend to turn to one side when flown forward. The reason for this phenomenon is that the rotor blade which is moving forward encounters an increased airflow caused by the wind, and this increases its upthrust compared with the blade which is moving downwind, where the same airflow has to be subtracted. The net result is a lateral inclination of the helicopter.

Descent
If the helicopter’s rotor speed is relatively low and you place the helicopter in a fast vertical descent, the result can be that insufficient air flows through the rotor. This can cause what is known as a „turbulent ring stage“, when the airflow over the blade airfoil breaks away. The helicopter is then uncontrollable and will usually crash. A high-speed descent is therefore only possible if the helicopter is moving forward, or if the rotor is spinning at high speed. For the same reason care should be exercised when turning the model helicopter downwind after flying into wind.

Flapping motion of the rotor blades
As we have already seen, the forward-moving blade produces greater upthrust than the trailing blade. This effect can be minimised by allowing the leading blade to rise and the trailing blade to fall. The rotor head is fitted with what is known as a flapping hinge to allow this movement, and

this prevents the rotor plane tilting excessively in forward flight. In model helicopters a single hinge shared by both blades has proved an effective solution to the problem.

Auto-rotation
This term refers to a helicopter flying without motor power. The rotational speed of the main rotor can be kept high by setting both blades to negative pitch, and the airflow through the rotor as it descends then keeps the blades turning. The rotational energy stored in the rotor by this means can be converted into upthrust when the helicopter is close to the ground, by the pilot applying positive collective pitch. Of course, this can only be done once, and it has to be done at the correct moment. Auto-rotation allows a model helicopter to land safely when the motor fails, just like a full-size machine.

However, auto-rotation places considerable demands on the pilot's judgement and reflexes; you can only halt the machine's descent once, and you must not „flare“ too early or too late. Much practice is required to get it right.

Notes